

VoIP

AP-MG5000 Next Generation Media Gateway

Design Concept



AddPac

AddPac Technology

Sales and Marketing

www.addpac.com

Contents

AP-MG5000 Media Gateway

- Features
- Hardware Specification
- Hardware Logical Diagram
- Hardware Detailed Diagram

Features

AP-MG5000 Media Gateway

- **Multi-Processor Architecture for High Performance**
  - System Processor : Signaling, Call Control
  - Communication Processors : DSP Processing, RTP
- **System Processor Board, 4E1/T1 DSP Board, Power Supply Module**
- **Four(4) DSP Board Slots (Upto 16E1/T1 Interface)**
- **Compact PCI Style Hot-Swap Support**
- **Network Interface**
  - Two(2) 10/100/1000Mbps Giga-Bit Ethernet
  - One(1) RS-232C Console
  - Six(6) Fast Ethernet L2 Switch
- **Power Supply**
  - Power Redundancy (Dual Power Supply)
  - Hot-Swap Power Module

Hardware Specification

AP-MG5000 Media Gateway

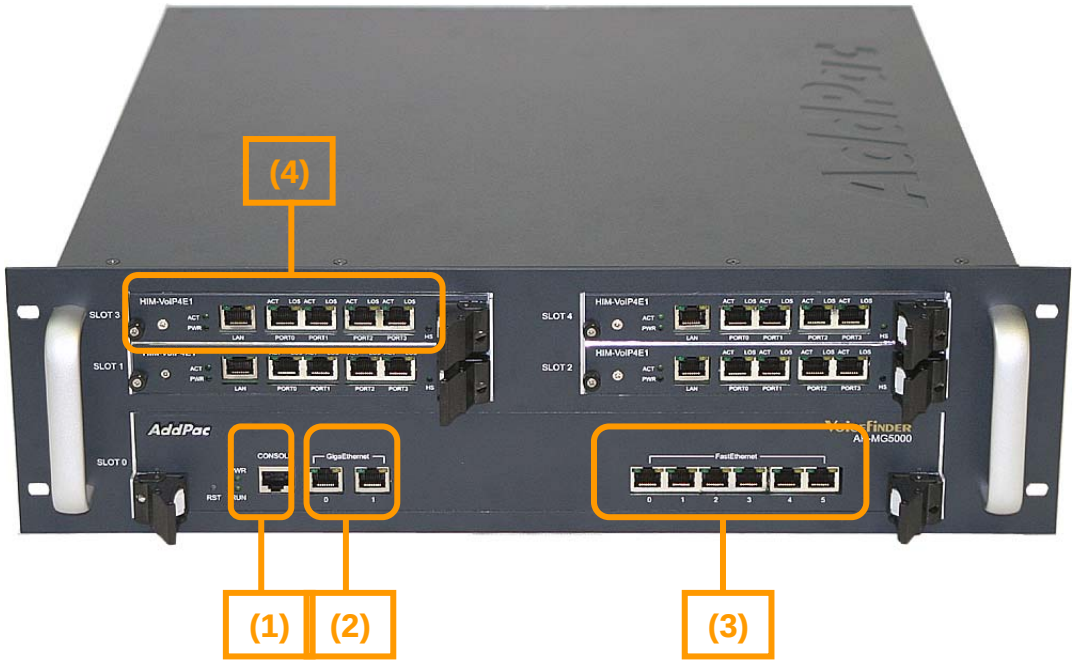

No.	Interface	Explanation
(1)	Asynchronous Serial	One(1) RS-232C serial ports for Local system management
(2)	Gigabit Ethernet	Two(2) 10/100/1000Mbps Gigabit Ethernet Ports for LAN interface
(3)	Fast Ethernet Switch	Six(6) 10/100 Fast Ethernet Ports for LAN interface
(4)	Module Slot 0-3	Four(4) Digital E1/T1 Interface, One(1) 10/100Mbps Fast Ethernet

Hardware Specification

AP-MG5000 Media Gateway



AP-MG5000 4E1 DSP Module

4E1 DSP Module	Processor	64bit Communication Microprocessor	
	Memory	SDRAM	64Mbyte High Speed SDRAM
		Boot Memory	512Kbyte Flash Memory
	Network Interface	Six(6) 10/100 Fast Ethernet Ports for LAN interface	
		1-Port 10/100Mbps Fast Ethernet Interface (1 x RJ45)	

Hardware Logical Diagram

AP-MG5000 Media Gateway

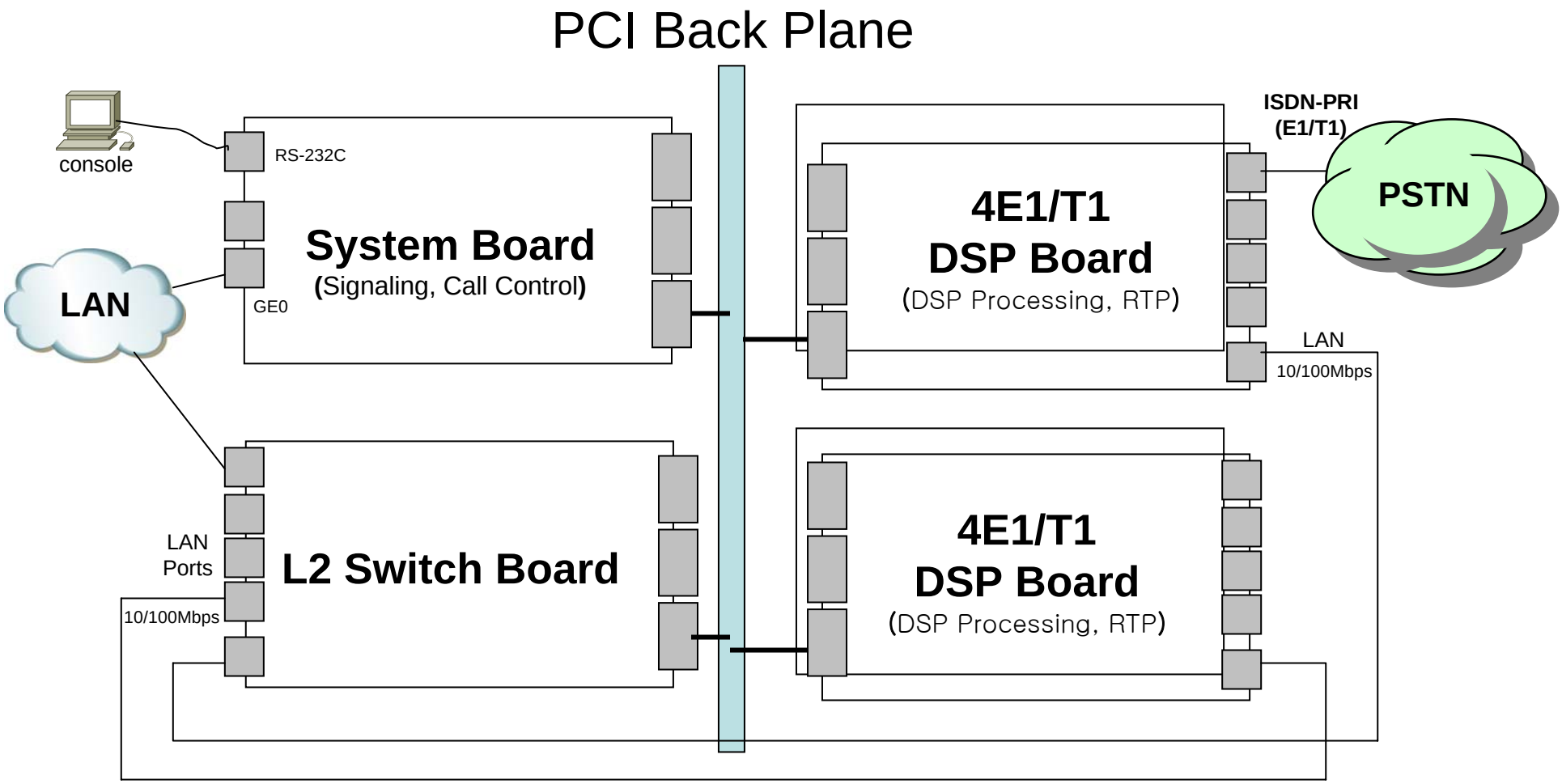

Hardware Detailed Diagram

AP-MG5000 Media Gateway

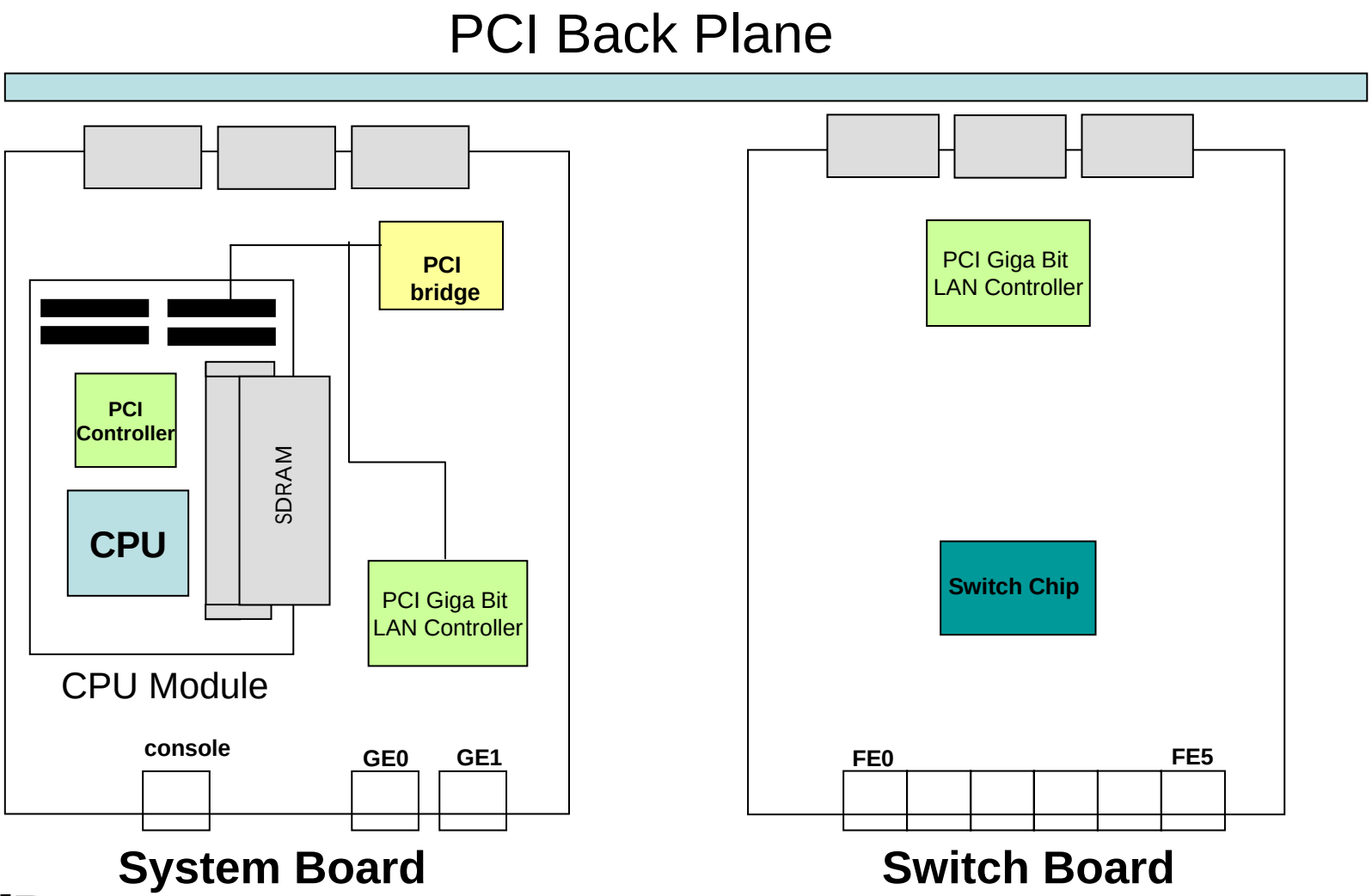

Hardware Detailed Diagram

AP-MG5000 Media Gateway

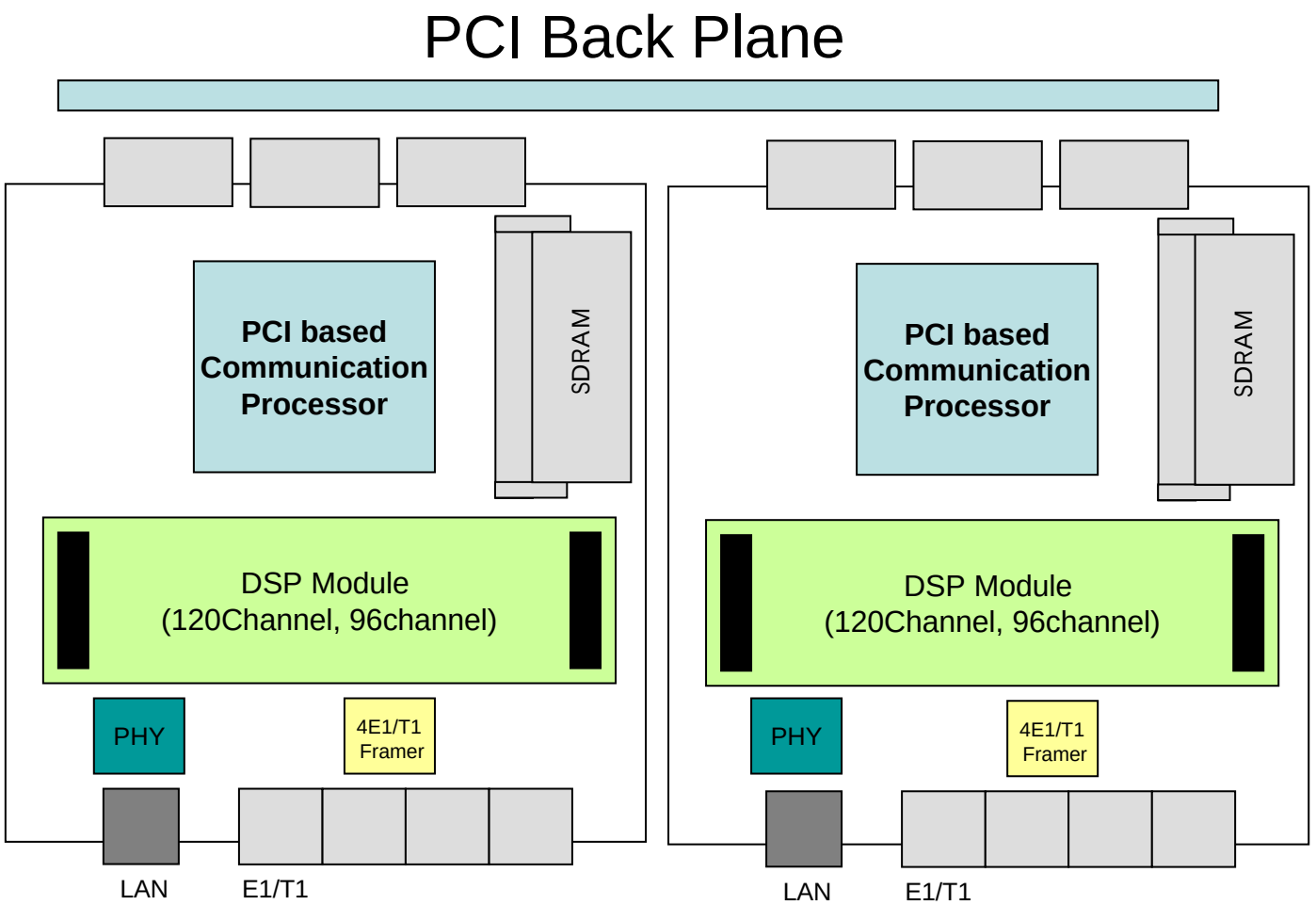

Thank you!

AddPac Technology Co., Ltd.
Sales and Marketing

Phone +82.2.568.3848 (KOREA)
FAX +82.2.568.3847 (KOREA)
E-mail sales@addpac.com