# AP-MG3000 IP Call Center Application

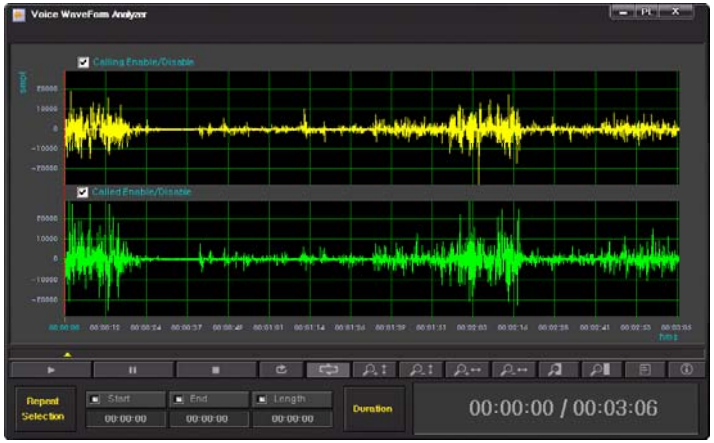








**AddPac Technology**

Sales and Marketing

# Contents

- Network Diagrams
- Product Specifications
  - IPNext3000 SIP Server for Call Center
  - AP-AS10000 Application Server
  - Voice Recording Server : AP-NR3000 (commercial server)
  - Voice Transcoder (Option): AP-VTC1000
  - Media Gateways for Voice Recording Extension: AP-MG3000, etc
  - Smart Digital Voice Recording Management Program

# Network Diagram

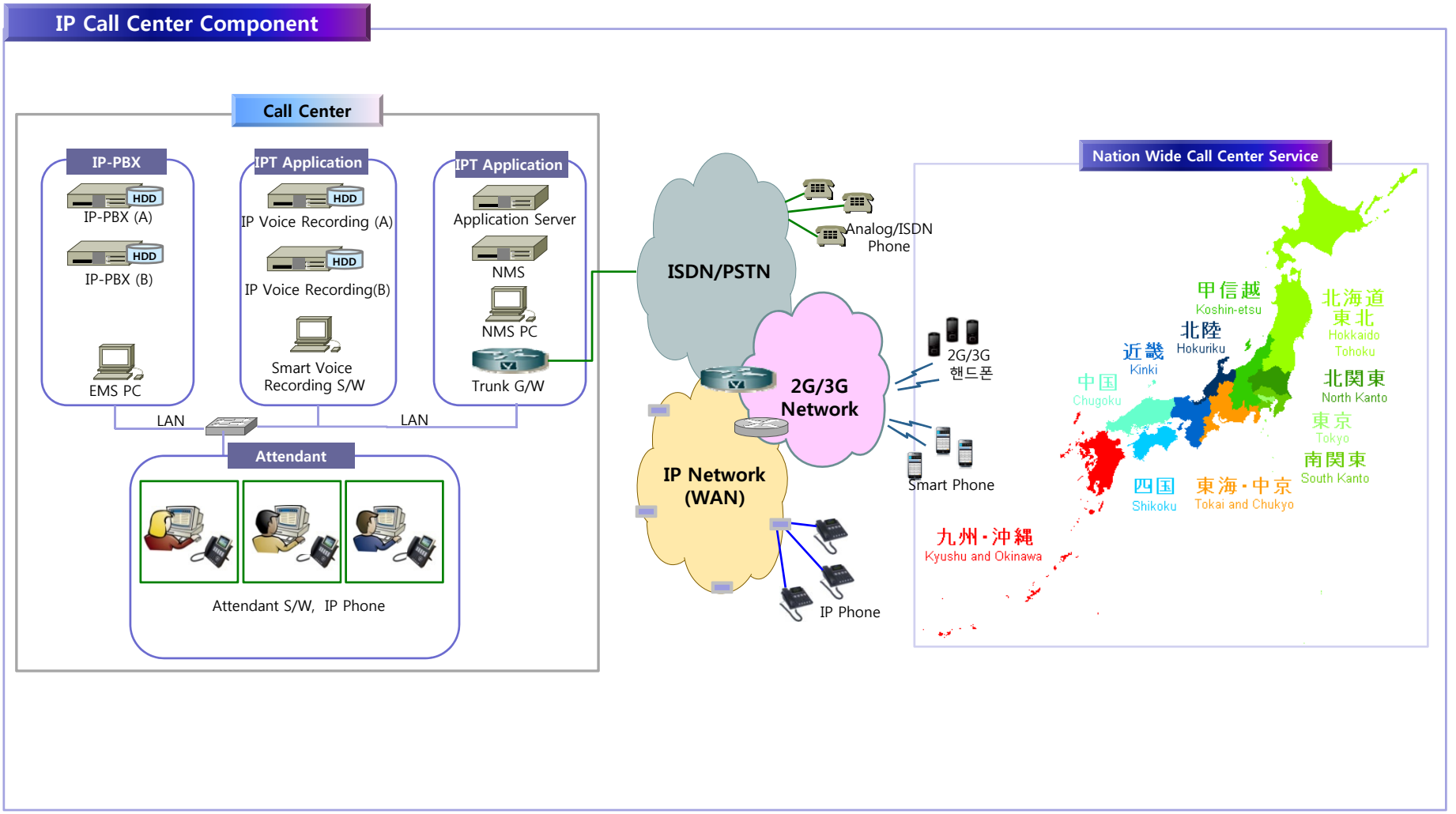

# Network Diagram

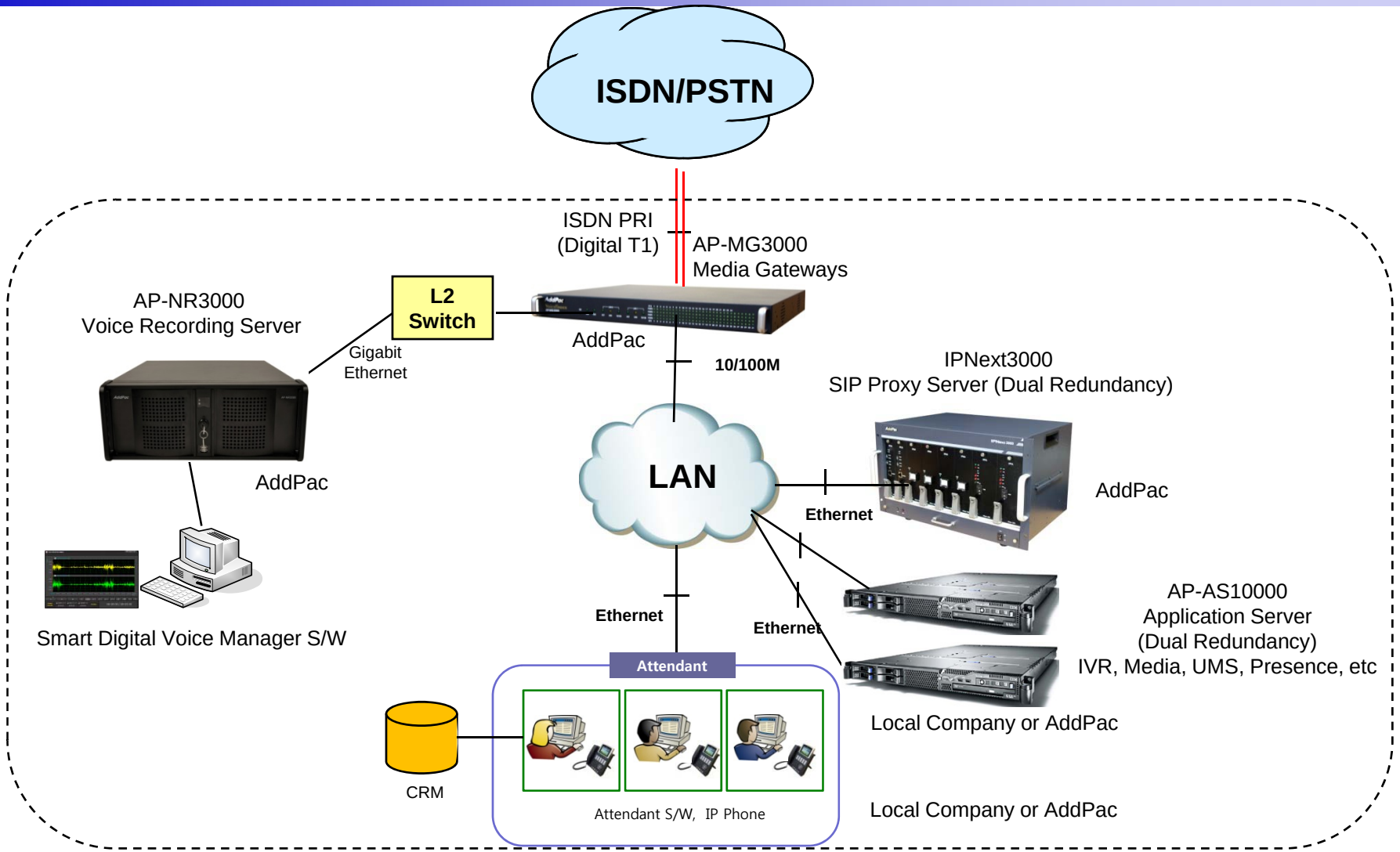

# IPNext3000
# SIP Proxy Server

# Product Overview

- SIP Application Server, Proxy, Registrar and Location Server(RFC3261)
- IPv4/IPv6 based Dual Network Protocol Support
- Internal RTP Proxy Function Support
- Internal Presence Function Support with Smart Messenger
- SIP, H.323 Signaling for Outbound Calls
- Various Call Scenario (Call Pickup, Call Park, Call Transfer, etc)
- Various IP Terminal Support
- Powerful Management and User Friendly Features
- Fault Tolerant and Scalability Architecture
- High-performance Video, Audio, and Voice Service
- Firmware Upgradeable Architecture
- Dual System Redundancy Architecture
  - Two(2) 3.5 Inch SATA Hard Disk (RAID 1) / System
  - Two(2) Gigabit Ethernet Interface / System
- Dual Redundancy Power Module

# H/W Diagram

## IPNext 3000 Front Side




Power On/Off Switch for System

CPU Board (Hot-Swap)

Dual Power Supply Modules (Hot-Swap)

Dual 3.5 Inch HDD Disks(RAID1) : Hot-Swap

FAN Tray for Air Cooling

Power On/Off Switch for FAN Tray

# H/W Diagram

## IPNext 3000 Back Side



# Redundancy Architecture

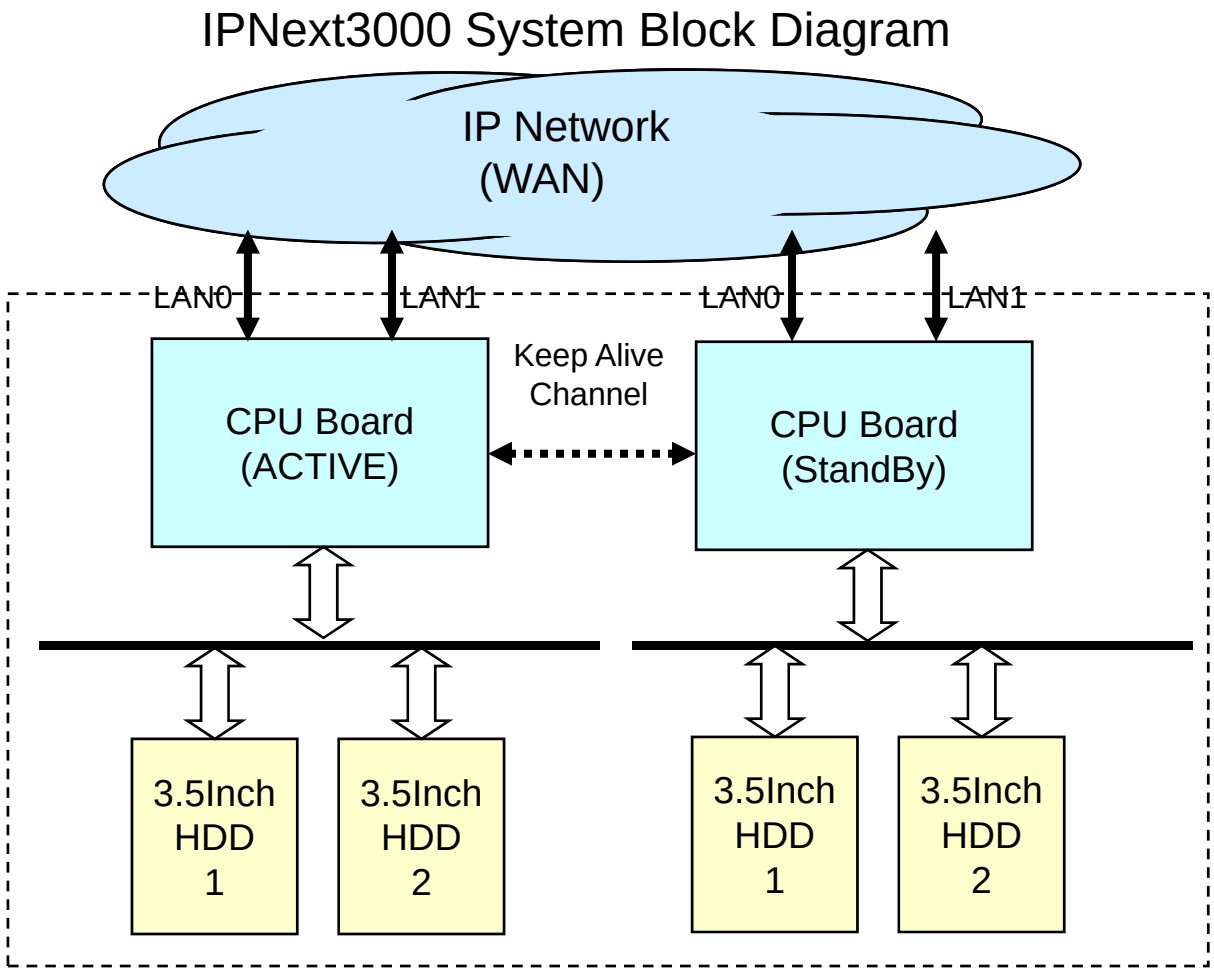

# AP-AS10000
# Application Server
# (option)

# Product Overview

- Commercial Hardware Platform(IBM, HP, etc)
- Linux Operating System
- IPv4/IPv6 based Dual Network Protocol Support
- IVR Service
- Media Service
- UMS Service* (IP-PBX Appl.)
- Presence Service*(IP-PBX Appl.)
- RTP Proxy Service for Private IP* (IP-PBX Appl.)
- Firmware Upgradeable Architecture



# AP-NR3000
# IP Voice Recording Server

# Product Overview

## AP-N3000 Network Voice Recoding Server

- IP based Network Voice Recording Server
- Linux Operating System
- Powerful Management and User Friendly Features
- High-performance Voice Recoding Service
- External Media Gateway(ex:AP-MG3000) Interworking Support
- Firmware Upgradeable Architecture
- One(1) 10/100/1000Mbps Gigabit Ethernet Interface
- One(1) DVD Writer for Audio File Backup
- Up to Four(4) 3.5Inch SATA Hard Disk Interface Support
- USB Interface Support (Front Side, Back Side)

# Hardware Specification

## AP-N3000 Network Voice Recoding Server

- High Performance Computing Power
- Main Chassis
  - Network Interface
    - One(1) 10/100/1000Mbps Fast Ethernet
  - Video Output Interface
    - HDMI, DVI,RGB Video Output
  - USB 2.0 Interfaces for Mouse, Keyboard, etc
  - One(1) DVD Writer for Video File Backup
  - Up to Four(4) Hard Disk



# Voice Transcoder

# AP-VTC1000 Voice Transcoder

- Embedded Platform
- High-End 64bit RISC Processor
- Real-time Voice Transcoding (Ex: G.729->G.711, etc)
- RTP/RTSP Support
- RISC Microprocessor Computing Power
- Network Interface
  - Two(2) 10/100Mbps Fast Ethernet
  - One(1) RS-232C Console
- DSP Module for Voice Transcoding
  - 32 Channel DSP Module
  - 64 Channel DSP Module
  - Voice Codec : G.711, G.729, G. 723.1, G.726, etc



# Media Gateways for Voice Recording Extension

# VoIP Gateways with Voice Recording Extension

| Product | AP2620 | AP2640 | AP2650 | AP-MG3000 |
|---|---|---|---|---|
| |  |  |  |  |
| Available Modules | AP-FXS4<br>AP-FXO4<br>AP-FXS2O2<br>AP-E&M4<br>AP-E1 | AP-FXS8<br>AP-FXO8<br>AP-FXS4O4<br>AP-E&M8<br>AP-E1 | AP-FXS8<br>AP-FXO8<br>AP-FXS4O4<br>AP-E&M8<br>AP-E1 | APv2-1E1<br>APv2-2E1<br>APv2-4E1 |
| Analog Ports | Up to 8 | Up to 32 | Up to 32 | N/A |
| Signaling | SIP, H.323 | SIP, H.323 | SIP, H.323 | SIP, H.323 |
| Digital E1/T1 | Up to 2E1/T1 | Up to 2E1/T1 | Up to 2E1/T1 | Up to 4E1/T1 |
| E&M | Support | Support | Support | N/A |
| Module Slot | Two(2) | Four(4) | Four(4) | Two(2) |
| LAN Port | 2 | 2 | 2 | 2 |
| Console | 1 | 1 | 1 | 1 |
| Power | Single PSU | Single PSU | Dual PSU | Single PSU |

# AP-MG3000 Media Gateway

- Voice Recording Interface Support
- ISND PRI Digital E1/T1 VoIP Interface
- Up to 4T1 Interface
- IPv4/IPv6 Address Support
- Two(2) Module Slots for Digital E1/T1 Interface
- SIP, H.323, MGCP VoIP Signaling Support
- Firmware Upgradeable Architecture



# Smart DVoiceR Management Program for Voice Recording Server

# Smart DV$_{oice}$R Management Program

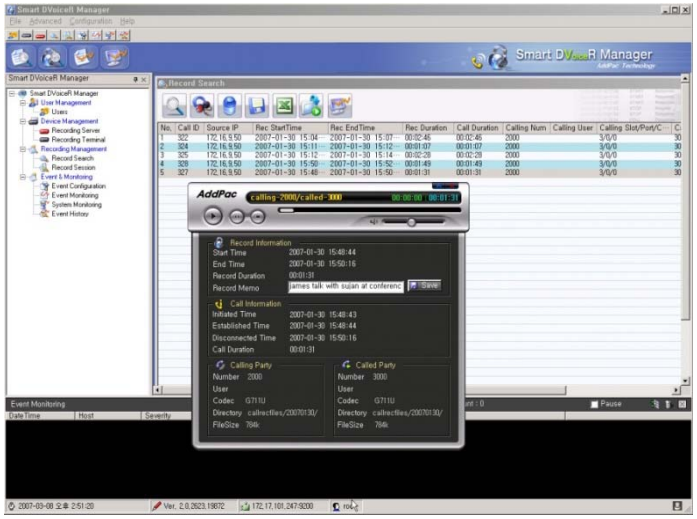

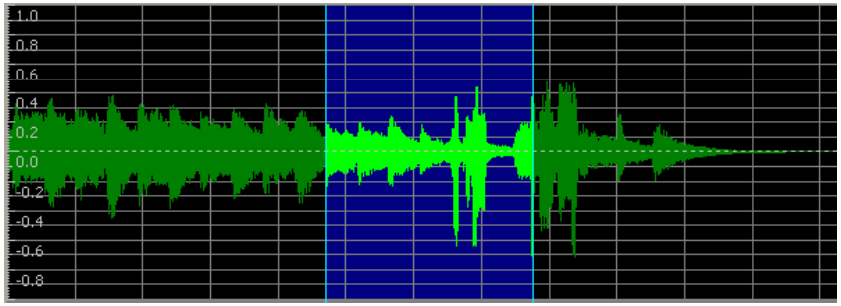


- Call History Management (search/modify/delete/save)
- Media Play Management (Play/Stop/Seek/Pause)
- Live Call List Management, Live Call Monitoring
- Local Backup (File Manager Support, PC HDD, DVD) and Local Play
- User Management (registration/modify/delete/search)
- Server Status (CPU/Memory/HDD) & Event Monitoring
- Waveform Analyzing Function
- Recording Source Management (VoIP Gateway, IP Phone, etc)
- Live Recording Board

# Thank you!

**AddPac Technology Co., Ltd.**
Sales and Marketing

Phone +82.2.568.3848 (KOREA)
FAX +82.2.568.3847 (KOREA)
E-mail sales@addpac.com