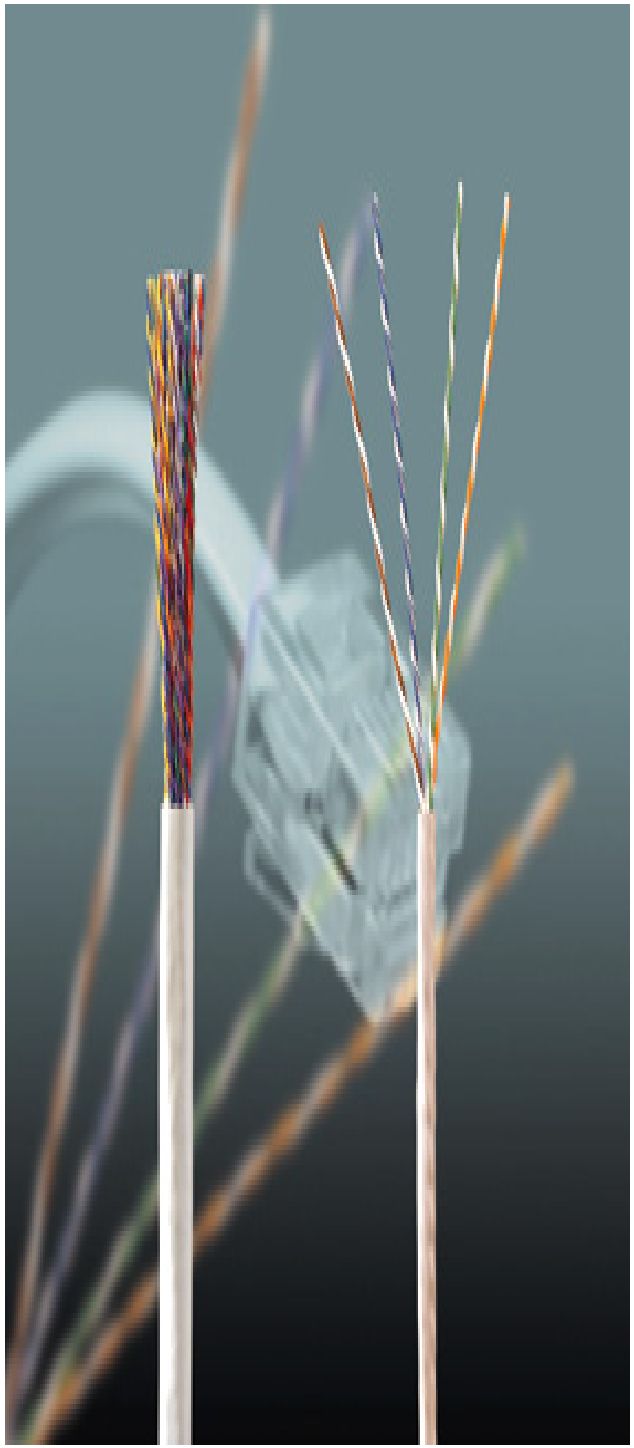

VoIP

AP-MG3000 Media Gateway

Design Concept



AddPac

AddPac Technology

Sales and Marketing

www.addpac.com

Contents

AP-MG3000 Media Gateway

- Features
- Hardware Specification
- Hardware Logical Diagram
- Hardware Detailed Diagram



Features

AP-MG3000 Media Gateway

- **High-End RISC Microprocessor**
- **Two(2) DSP Board Slots (Upto 4E1/T1 Interface)**
- **One(1) Network Interface Slots**
  - **Network Interface**
    - Two(2) 10/100Mbps Fast Ethernet Port
    - One(1) RS-232C Console Port
    - One(1) Aux Port
- **VoIP Channel Indication LEDs (120 Channel)**
- **DSP Boards**
  - **One(1) E1, T1 Board**
  - **Two(2) E1, T1 Board**
  - **Four(4) E1, T1 Board**

Hardware Specification

AP-MG3000 Media Gateway

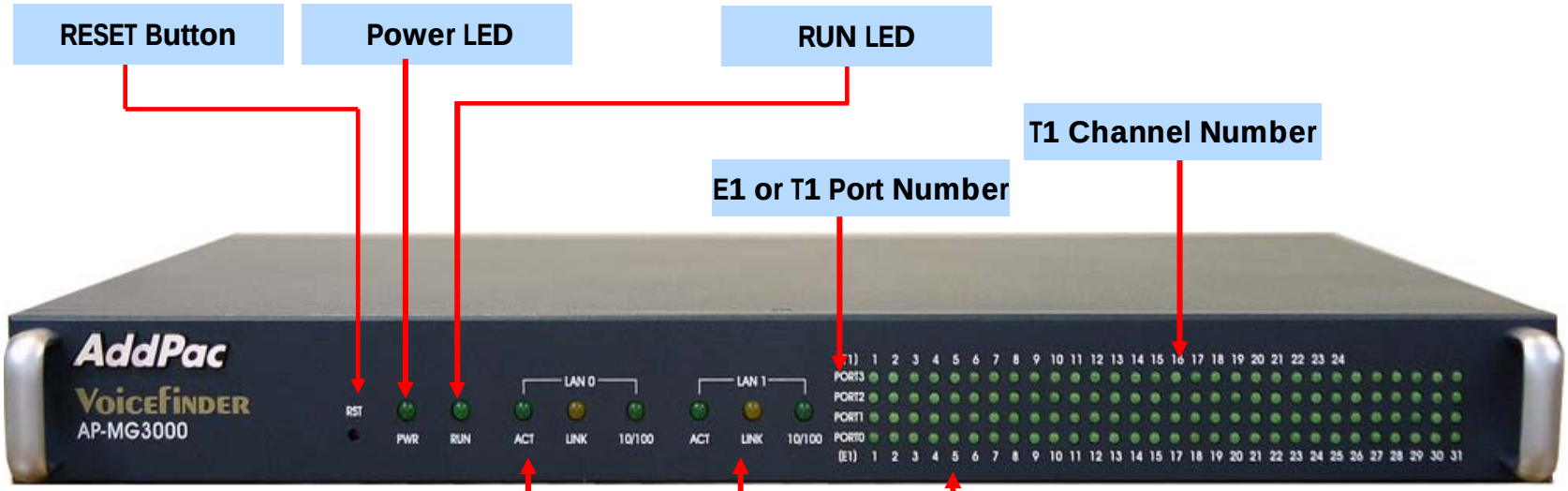

Hardware Specification

AP-MG3000 Media Gateway

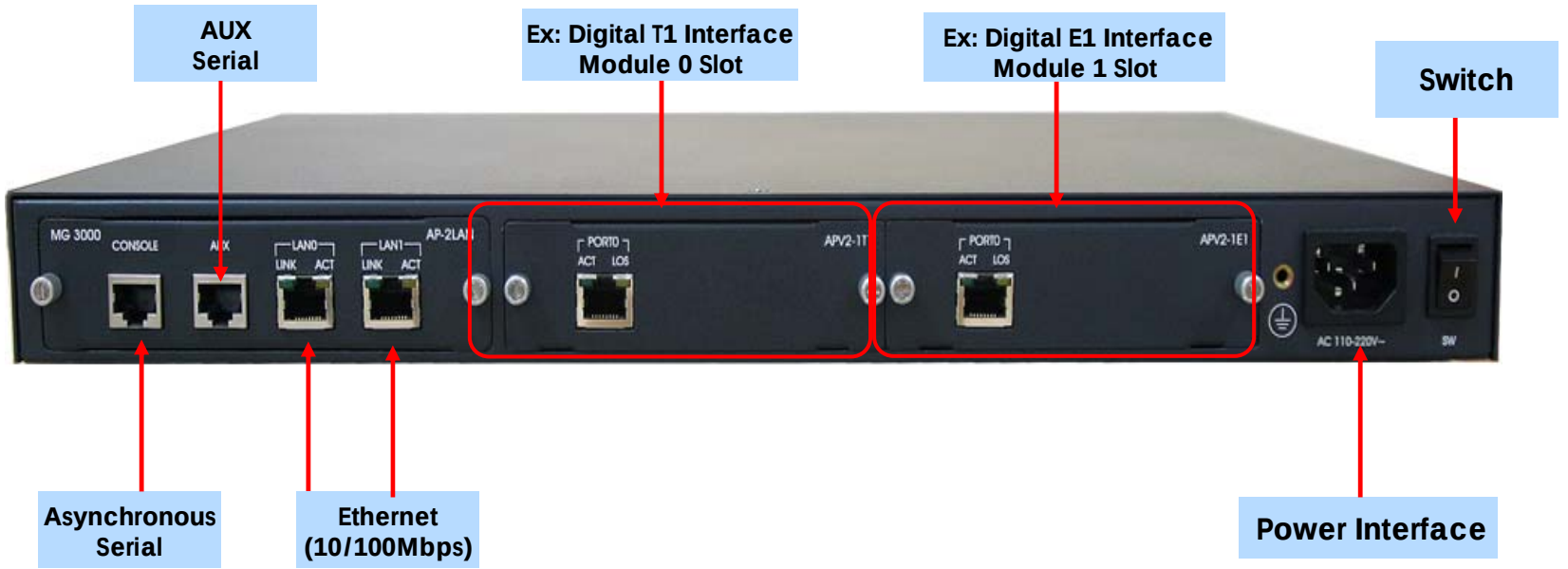

Hardware Detailed Diagram

AP-MG3000 Media Gateway

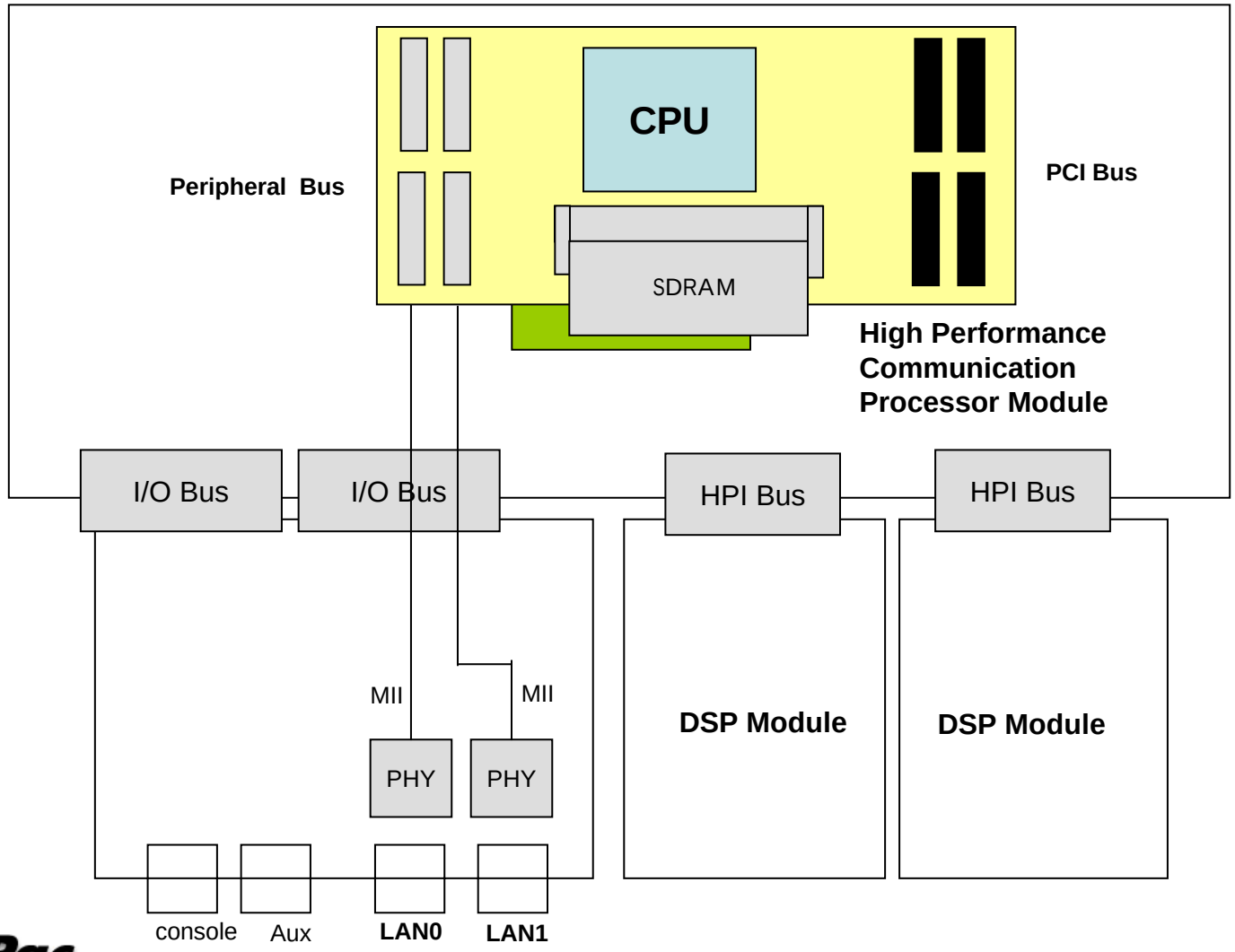

Hardware Detailed Diagram

AP-MG3000 Media Gateway

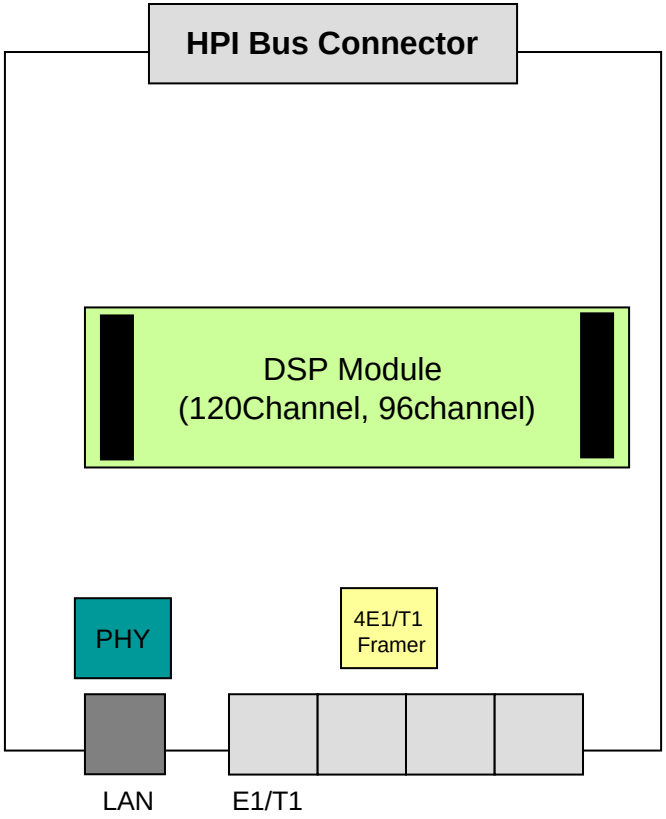

4T1,4E1 DSP Board

Thank you!

AddPac Technology Co., Ltd.
Sales and Marketing

Phone +82.2.568.3848 (KOREA)
FAX +82.2.568.3847 (KOREA)
E-mail sales@addpac.com