

AddPac VoIP Gateway Series

NTT DID(Direct Inward Dialing) Overview



AddPac Technology

Sales and Marketing

Contents

- NTT DID Service
- NTT DID Network Diagram (NTT-PB : DTMF)
- NTT DID Network Diagram (NTT-Modem: FSK)
- NTT DID Signaling Flow(SIP)
  - FXS
  - FXO
  - ISDN PRI
- Command Line Interface

NTT DID Service

- The VoIP gateway supports DTMF, Modem and PB(Push/Button Dial Signal) types for tone generation.
- It is applied to the FXS/FXO/ISDN-PRI ports.
- DID enables callers to dial directly into an extension on a PBX without having to use an auto attendant.
- The dialed extension number is forwarded to the PBX and the call is connected to the local telephone.
- AddPac's all VoIP products supports the feature and it can be enabled/disabled by configuration.

Network Diagram(NTT-PB : DTMF)

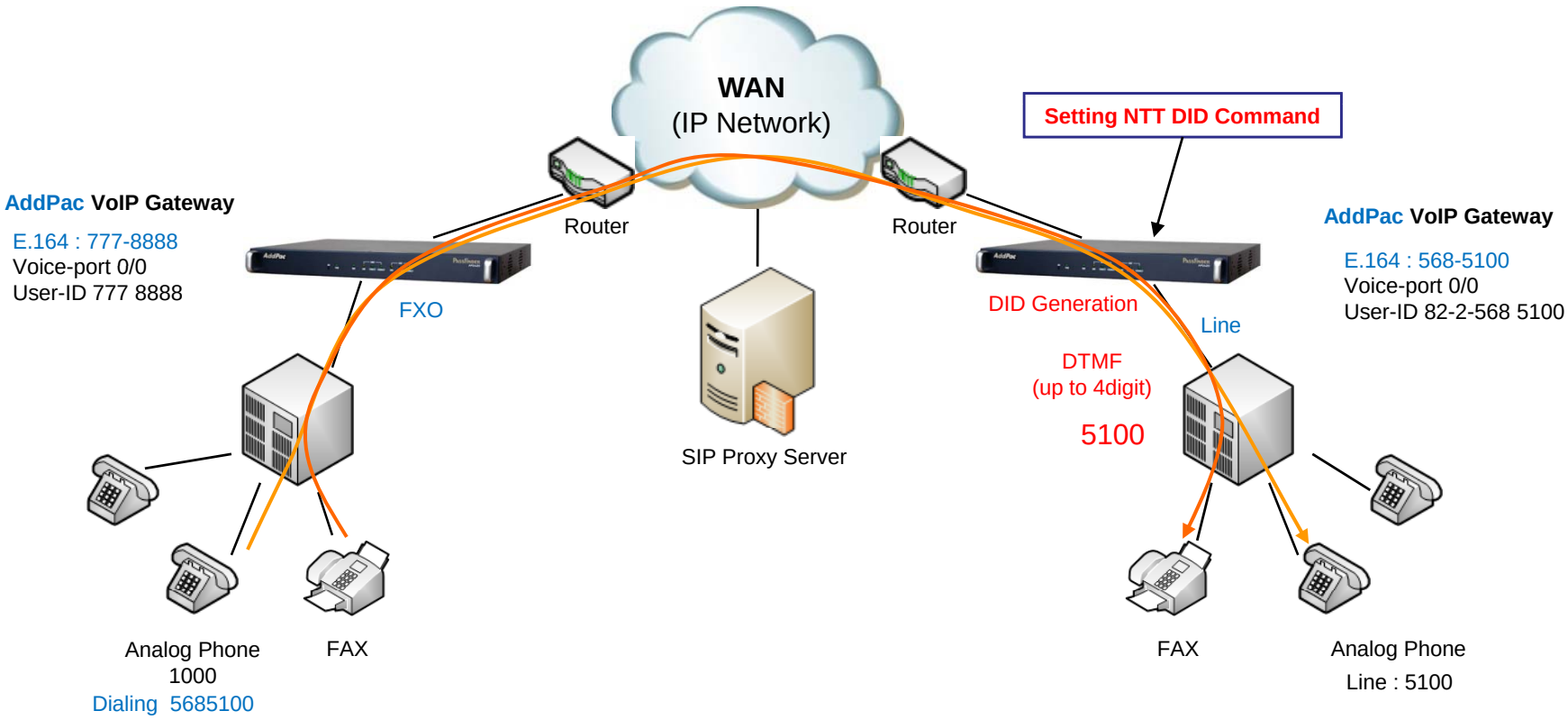

Network Diagram(NTT-Modem : FSK)

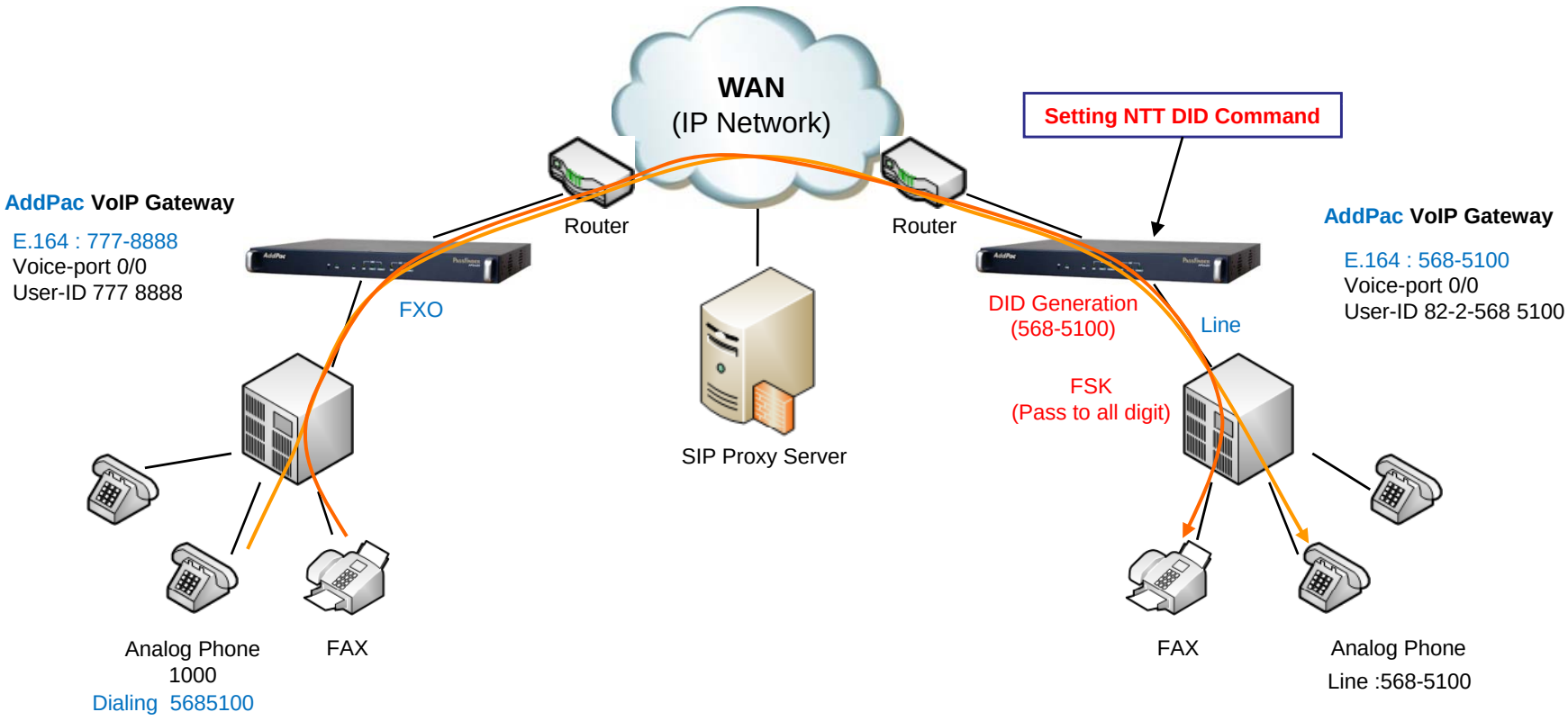

Signaling Flow - FXS

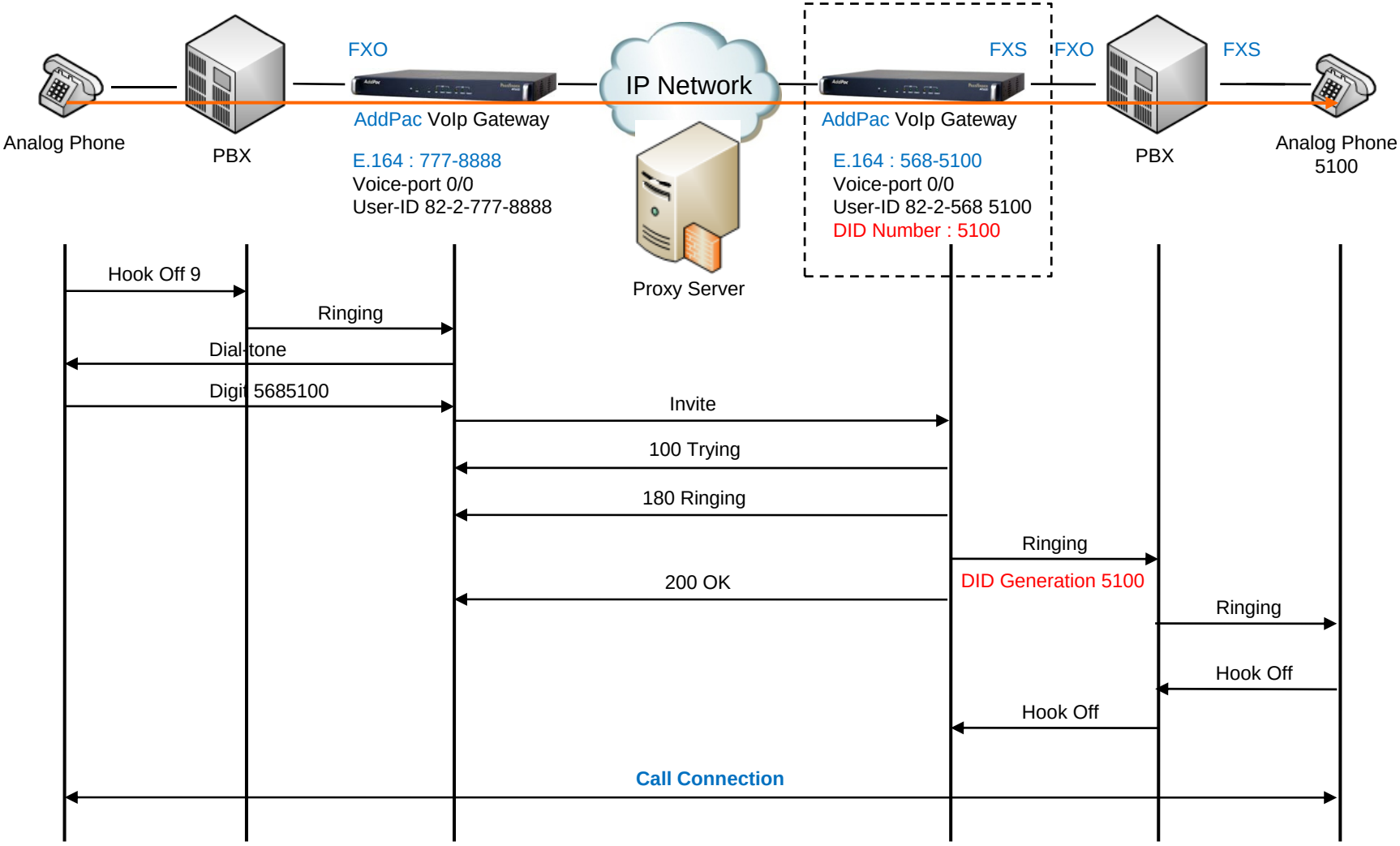

Signaling Flow - FXO

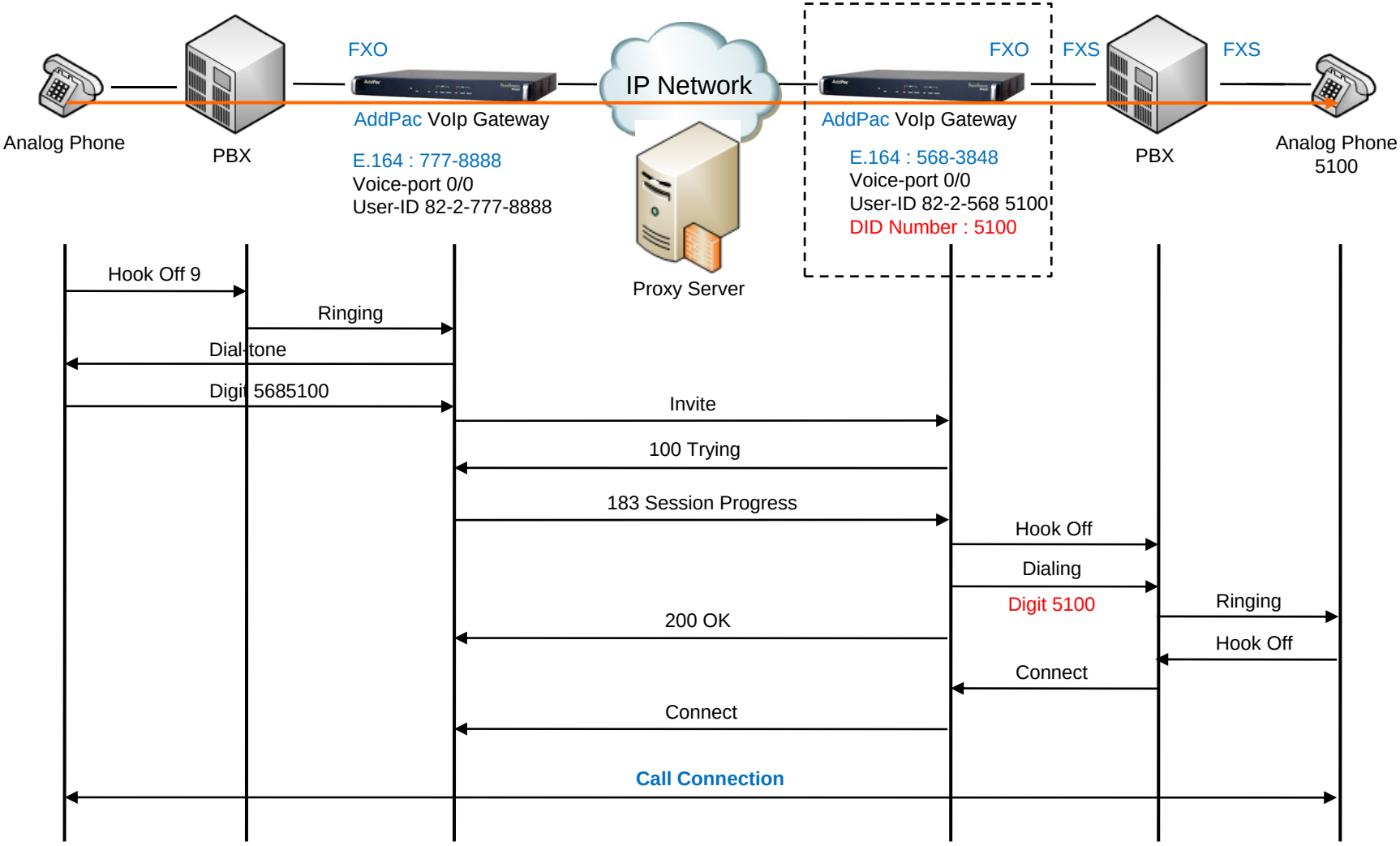

Signaling Flow - FXO

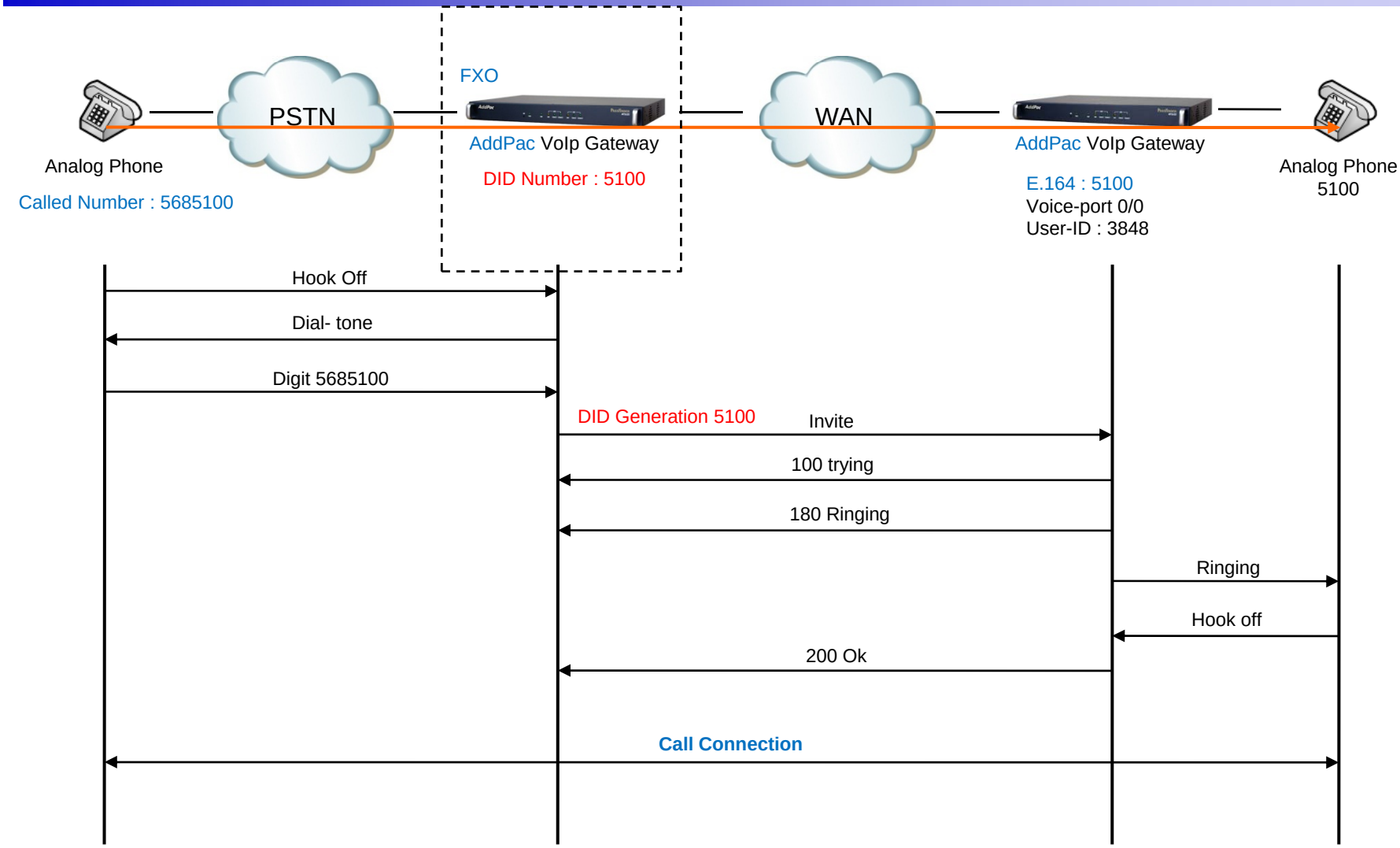

Signaling Flow – ISDN PRI

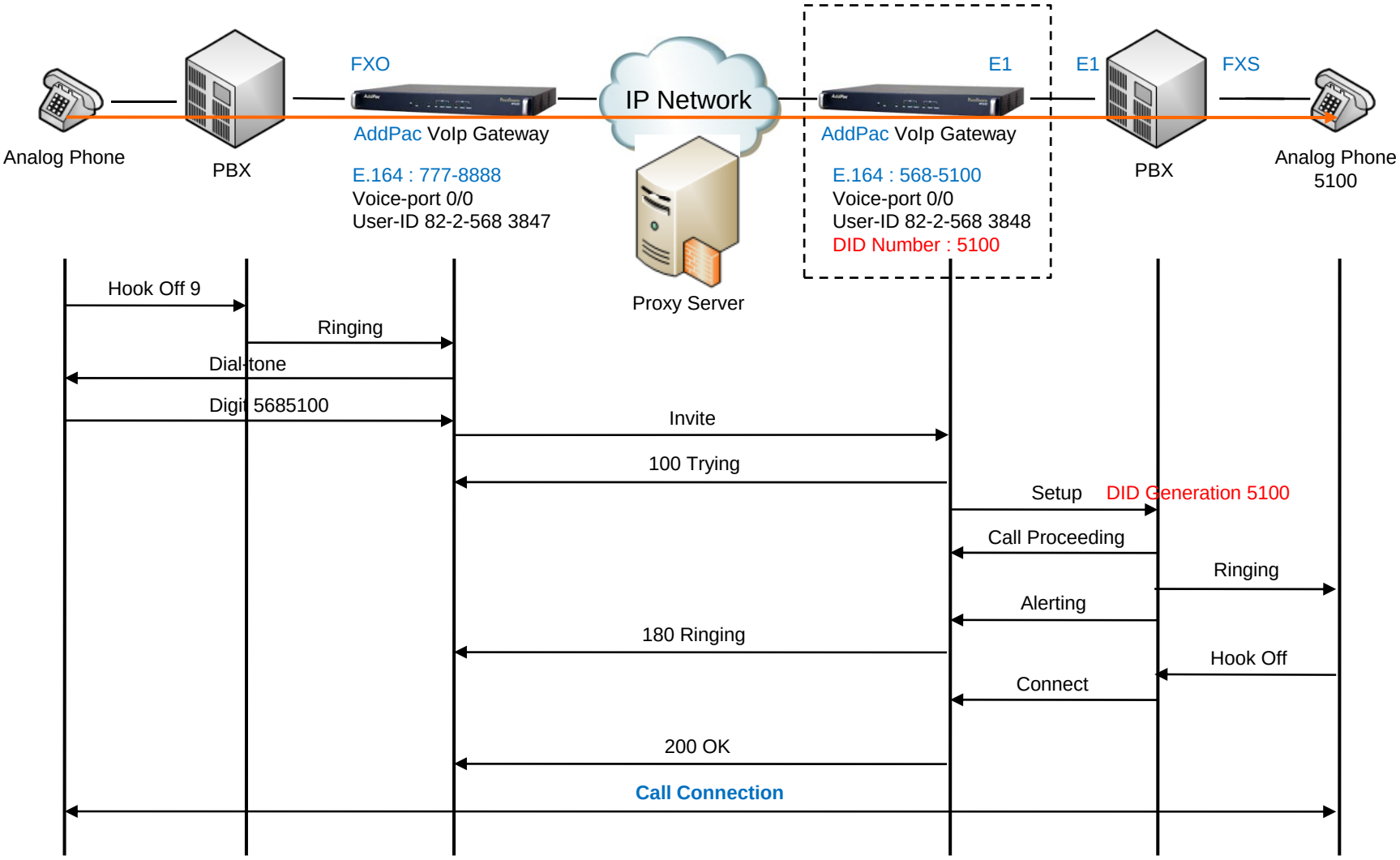

Command Line Interface

FXS, ISDN DID Configuration Command (Default : Disable)

1. Normal : DTMF Type Digit Transmission (forward digits after hook off.)
2. None : Disable DID Feature
3. NTT-PB : NTT-PB Type Digit Transmission
4. NTT-Modem : FSK Modem Type

- CID function should be enabled for NTT-Modem DID service plus CID service.
- CID function is disabled as a default value.

Command Line Interface

```
Welcome to AP2620 !

login: root        ← Login
Password:

AP2620  -  Login  : root at tty/1 on Tue Jan 10 10:33:06 2012
AP2620_A#
AP2620_A# configure terminal      ← Global Configuration
  Enter configuration commands, one per line. End with CNTL/Z
AP2620_A(config)# voice-port <slot>/<port>        ← Voice-Port  Interface Configuration
AP2620_A(config-voice-port-0/0)# did { none | normal | ntt-modem | ntt-pb }    ← DID Command
 normal         set normal mode (default : forward digits after hook off.)
 none           set none forward digit mode
 ntt-modem      set NTT modem mode
 ntt-pb         set NTT PB mode
AP2620_A#
```

Command Line Interface

- Transmission All Digit

```
AP2620_A#
AP2620_A# dial-peer voice 0 pots                ← Pots Peer Configuration
AP2620_A# destination-pattern 5683848           ← Destination Pattern Configuration Command
AP2620_A# port 0/0                              ← Port Configuration Command
AP2620_A# forward-digit from 0                  ← Digit Transmit from 0 th Digit Position
AP2620_A#
```

- Transmission Part of Digit – forward digit from

```
AP2620_A#
AP2620_A# dial-peer voice 0 pots                ← Pots Peer Configuration
AP2620_A# destination-pattern 5683848           ← Destination Pattern Configuration Command
AP2620_A# port 0/0                              ← Port  Configuration Command
AP2620_A# forward-digit from 4                  ← Digit Transmit from 4 th Digit Position(3848)
AP2620_A#
```

Command Line Interface

- Transmission Part of Digit– forward digit last

```
AP2620_A#
AP2620_A# dial-peer voice 0 pots                ← Pots Peer Configuration
AP2620_A# destination-pattern 5683848           ← Destination Pattern Configuration Command
AP2620_A# port 0/0                              ← Port Configuration Command
AP2620_A# forward-digit last 4                  ← Digit Transmit from last 4 digit position
AP2620_A#
```

- Transmission Part of Digit - Prefix

```
AP2620_A#
AP2620_A# dial-peer voice 0 pots                ← Pots Peer Configuration
AP2620_A# destination-pattern 5683848           ← Destination Pattern Configuration Command
AP2620_A# port 0/0                              ← Port Configuration Command
AP2620_A# Prefix 2000                           ← Transmit Digit 2000 to PBX
AP2620_A#
```

Thank you!

AddPac Technology Co., Ltd.
Sales and Marketing

Phone +82.2.568.3848 (KOREA)
FAX +82.2.568.3847 (KOREA)
E-mail sales@addpac.com