Media Gateway Series

QoS Service Overview



AddPac Technology

Sales and Marketing

Contents

- Network Diagram
- Advanced QoS Features
- Packet Transmit Diagram (before, after QoS mode)
- Command Line Example for QoS Mode

Network Diagram

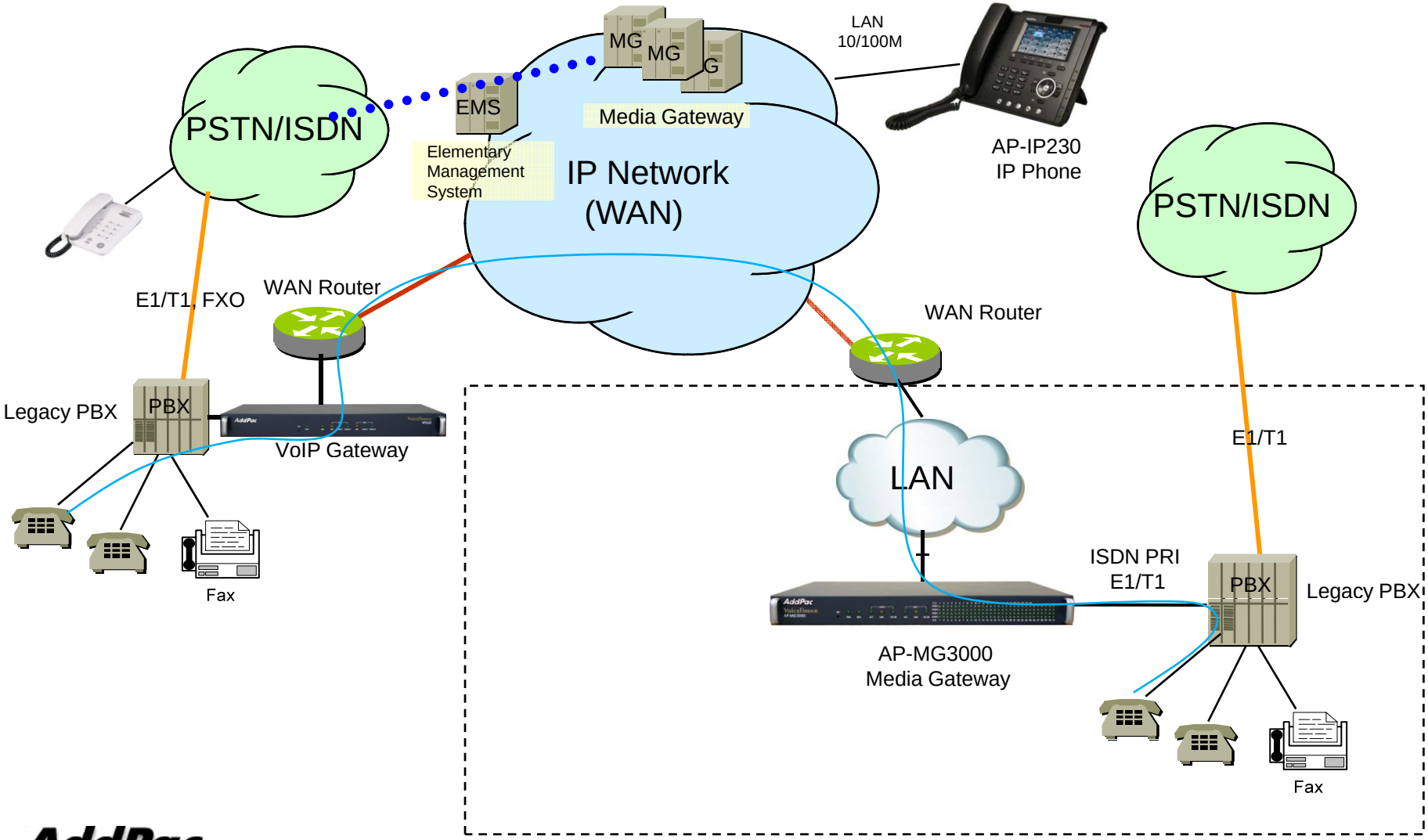

Network Diagram

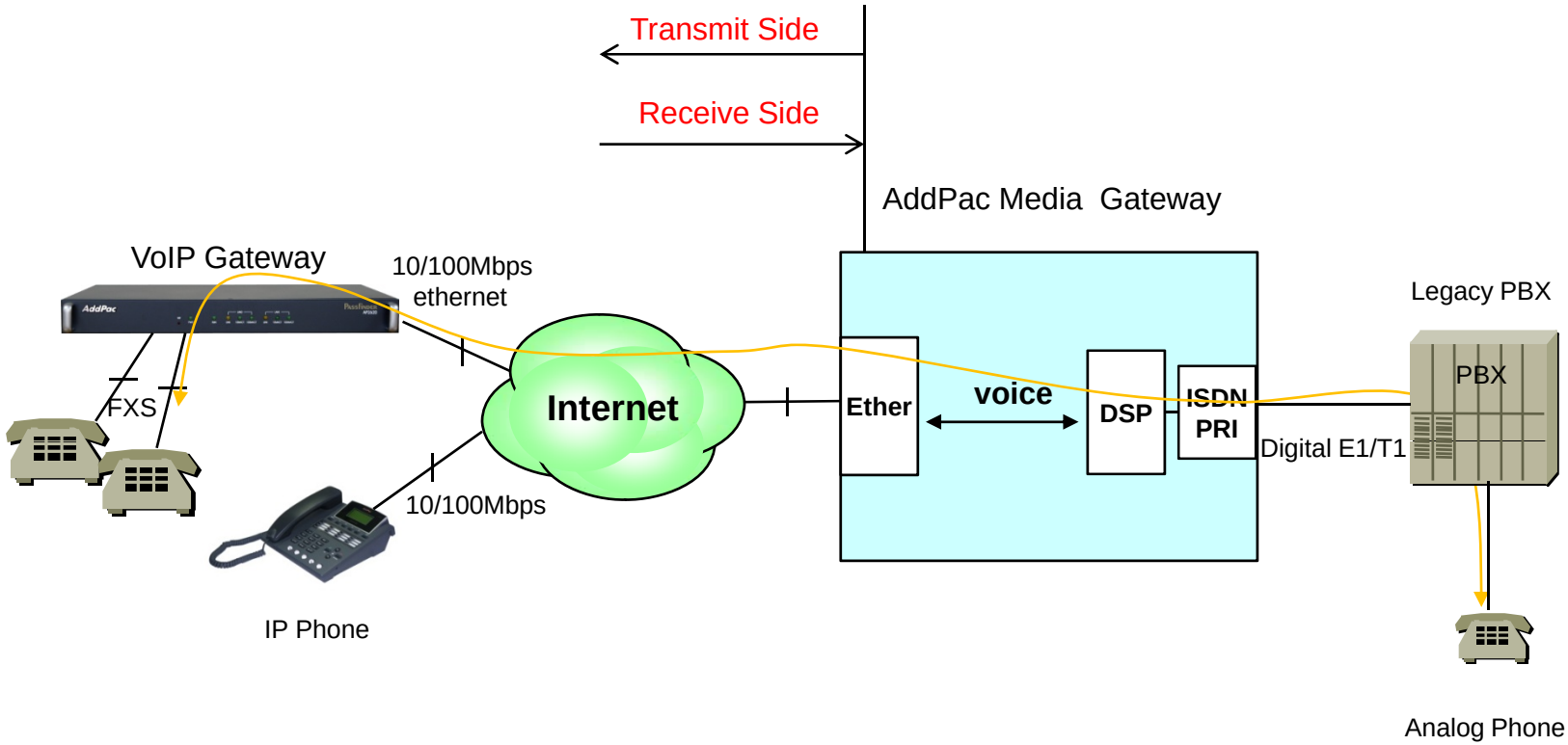

Advanced QoS Features

- Enhances Transmit Voice QoS Features
  - Voice Traffic Priority Queuing
  - QoS Service Profiling
  - Providing Virtual Network Transmit Algorithm
  - Real-time Voice Traffic QoS Support
  - RTP Packet Transmit Interval Control
  - Supporting RTP Packet Redundancy Scheme
  - IP Header Control such as ToS, Diffserv
- Enhances Receive Voice QoS Features
  - Dynamic Jitter Buffer Management
  - Error Concealment

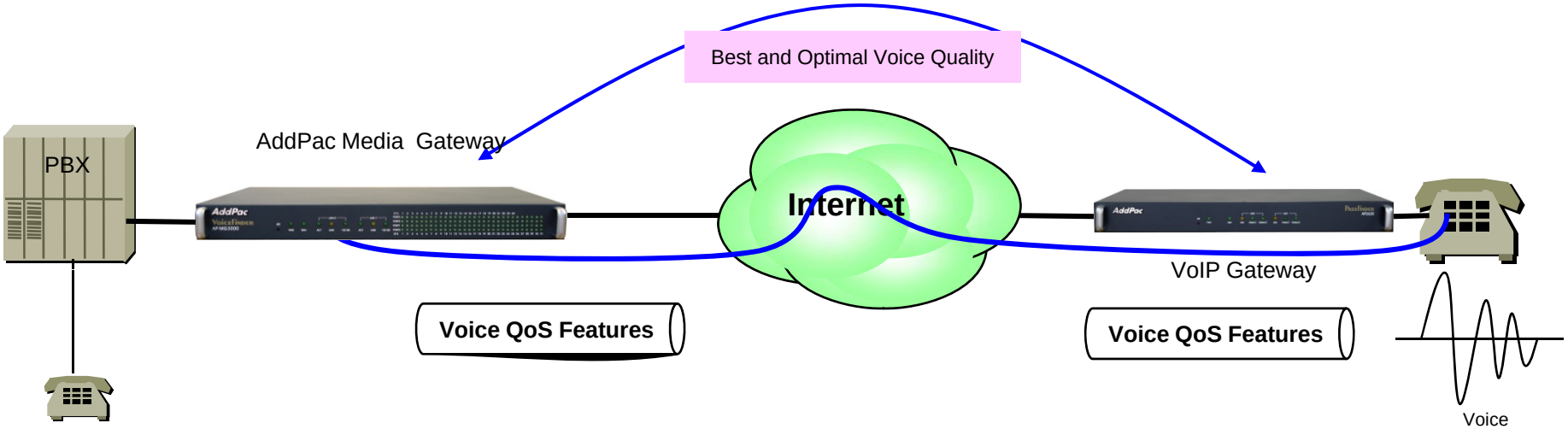

Packet Transmit (Before QoS enable mode)

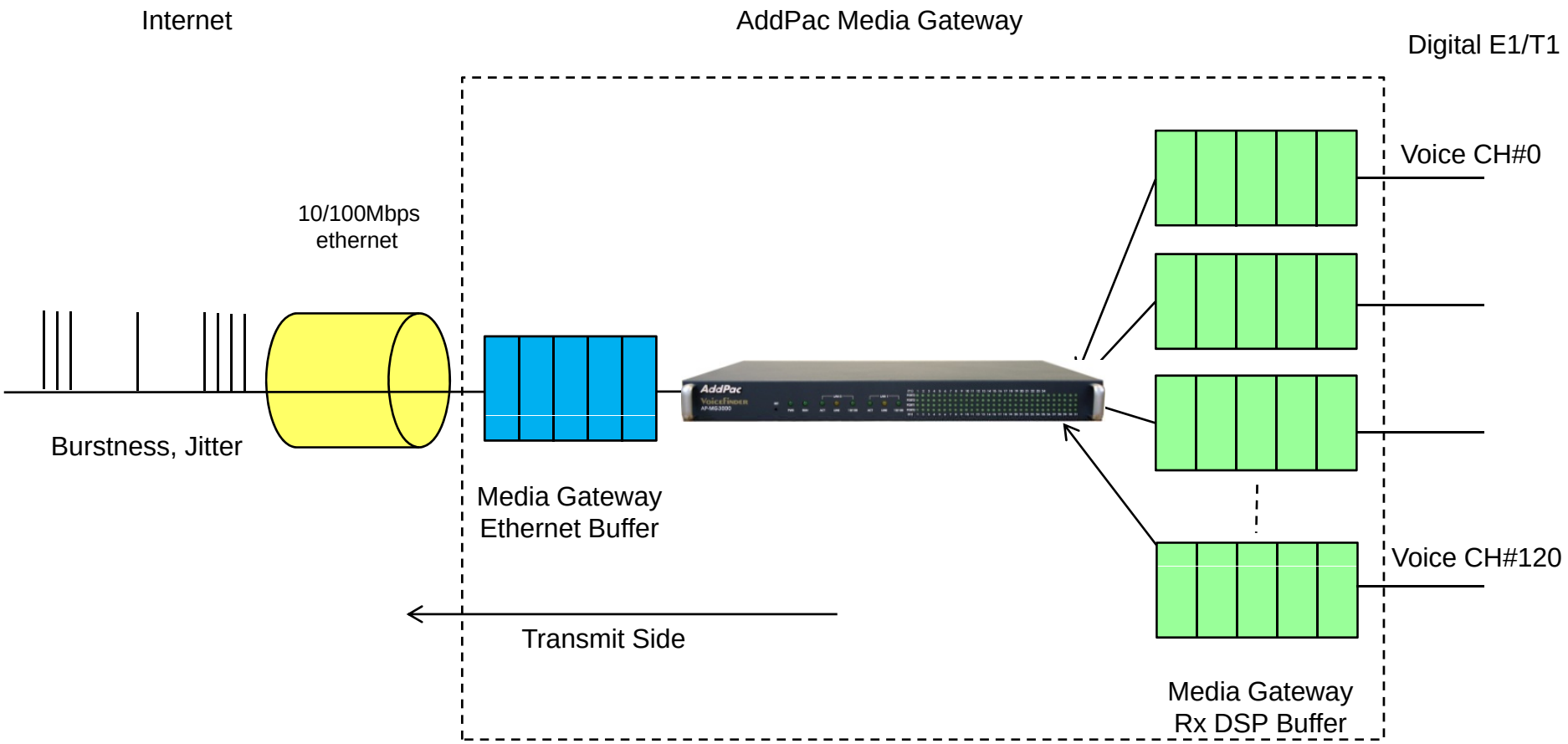

Packet Transmit (After QoS enable mode)

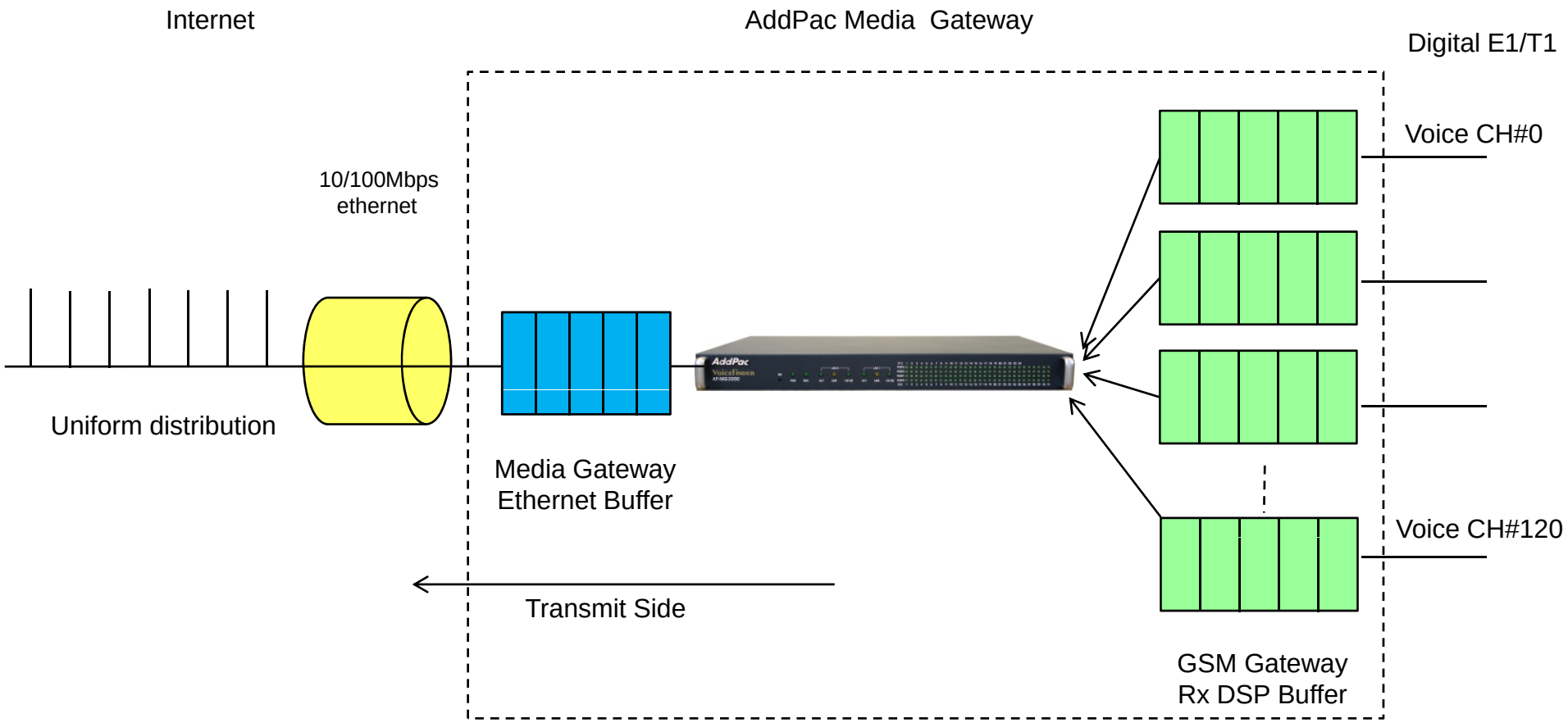

CLI for Ethernet interface QoS

```
Welcome, APOS(tm) Kernel Version 8.51.002.
Copyright (c) 1999-2010 AddPac Technology Co., Ltd.


User Access Verification

Login: root ← Login
Password:
MG3000_251> enable ← QoS Mode Enable
MG3000_251# configure terminal ← Global configuration
MG3000_251(config)# interface FastEthernet0/0 ← Fast Ethernet 0/0 interface configuration
MG3000_251(config-if)# qos-control
  <48-30000>  Qos bandwidth (Kbps)
  <cr>
MG3000_251(config-if)# qos-control 2048
  <50-2000>  Qos packet transmission rate (Packet Per Second)
  <cr>
MG3000_251(config-if)# qos-control 2048 2000
  <cr>
MG3000_251(config-if)# qos-control 2048 2000 ← QoS Command
```

Thank you!

AddPac Technology Co., Ltd.
Sales and Marketing

Phone +82.2.568.3848 (KOREA)
FAX +82.2.568.3847 (KOREA)
E-mail sales@addpac.com