VoIP Gateway Series

Analog Port Diagnostic Features
(FXS, FXO Port)



AddPac Technology

Sales and Marketing

Contents

- Network Diagram for Port Diagnostic Test
- FXS Interface Diagnostic Test
  - Diagnostic Test via Ring Generation On/Off Control
- FXO Interface Diagnostic Test
  - Diagnostic Test via Hook On/Off Control
- FXO Service Feature List
- FXO Port Service Feature Example
  - Polarity Inverse Detection
  - Caller-ID Detection
  - PSTN backup & busy-out function
- FXO Service Description
  - Voice-confirmed connect function
  - Clear down tone reg. and detect function
  - Hook flash timing
  - Ring number and detect timing



Network Diagram for Port Diagnostic

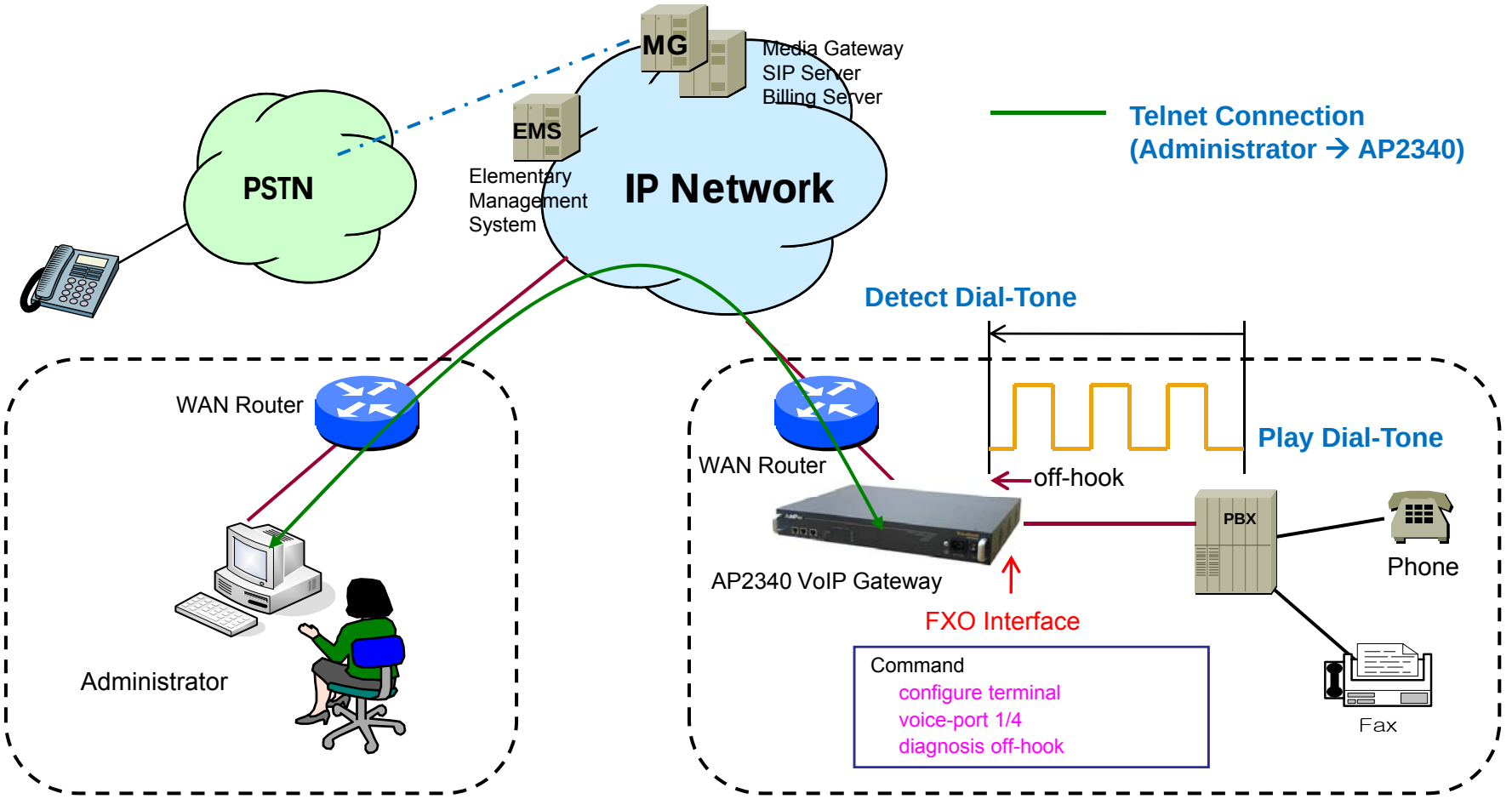

FXS Hardware Block Diagram

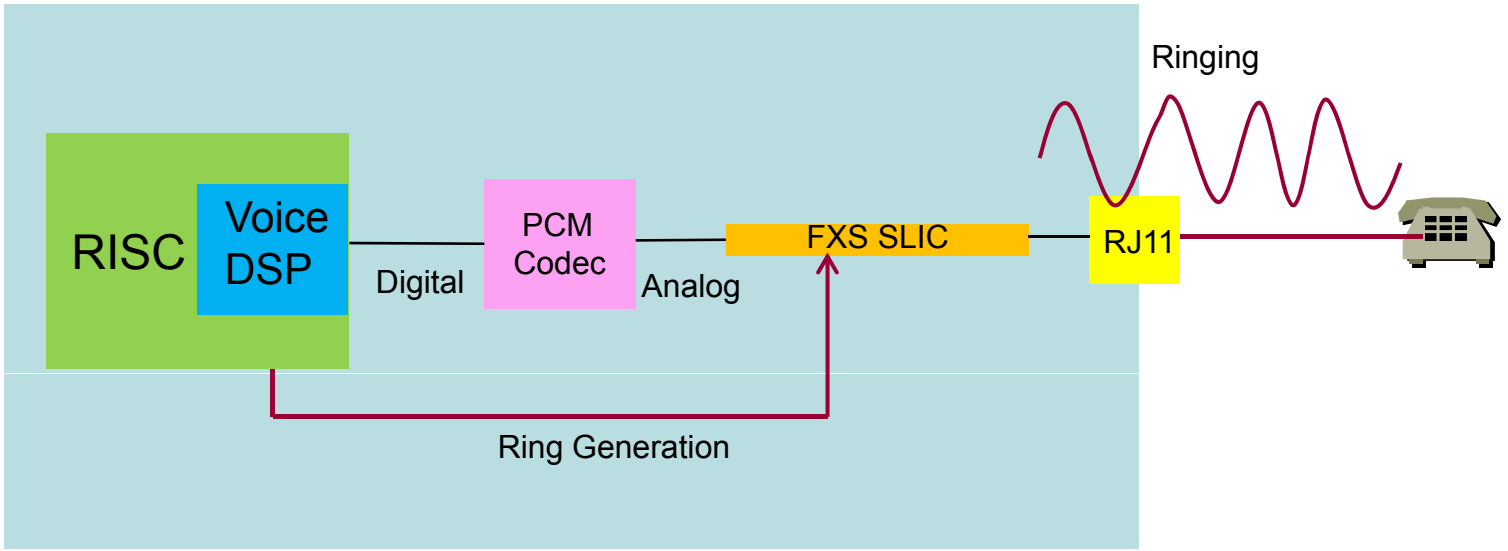

FXO Hardware Block Diagram

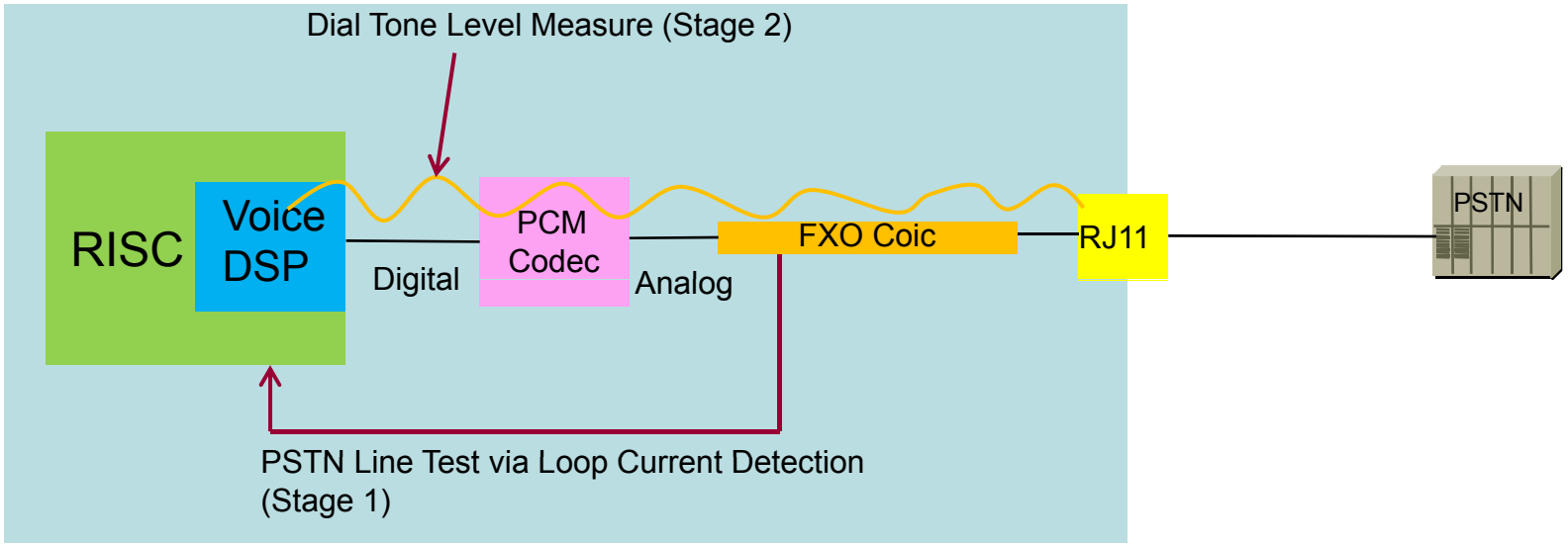

Stage 1 : PSTN Line Test by Loop Current Detection
Stage 2 : Internal FXO Hardware Test by Dial Tone Power Level Detection

Command Line Interface

- Diagnosis ring-on/off for FXS Interface Test

  FXS Port Ring Generation
  Check Debug message
  Check Port Information

  FXS Port Ring Termination

- Diagnosis off/on-hook for FXO Interface Test

  FXO Port off-hook
  Check PSTN Line : Loop Current Measure Instead of Voltage Level
  Detection Tone Level : Power Level Measure by using Voice DSP

  FXO Port Call Termination

FXS Port Diagnostic Example by CLI

```
Welcome to AddPac Gateway

login: root          ← Login
Password:
Gateway  > enable
Gateway#
Gateway# configure terminal          ← Global Configuration
Gateway(config)# voice-port 1/0          ← Voice Port Configuration
Gateway(config-voice-port-1/0)# diagnosis ring-<on/off>          ← FXS Port Ring Control
Gateway(config-voice-port-1/0)# diagnosis ring-on

RTA(1/0/0) Rx CC_RING_REQ peerId(-1)
VM(1/0/0) Line Reverse
VM(1/0/0) Start ring actv          ← Check Debug message
VM(1/0/0) SW to -72V
VM(1/0/0) Gen ring idle

Gateway(config-voice-port-1/0)# show rta port
  port   type codec VAD SID CNG echo iGn oGn Dial CDT MGC dbg conn   peer   state
-------------------------------------------------------------------------------
01/00/00 FXS  G711U  1   1   1   1    0   0  1    0   0   1  none   NULL   RINGING    ← Check Port Information
01/01/00 FXS  G711U  1   1   1   1    0   0  1    0   0   1  none   NULL   ON_HOOK
```

FXO Port Diagnostic Example by CLI

```
Welcome to AddPac Gateway

login: root          ← Login
Password:
Gateway  > enable
Gateway#
Gateway# configure terminal          ← Global Configuration
Gateway(config)# voice-port 1/4          ← Voice Port Configuration
Gateway(config-voice-port-1/4)# diagnosis <off/on>-hook      ← FXO Port Control
Gateway(config-voice-port-1/4)# diagnosis off-hook

VM(1/4/0) FXO OffHook
VM(1/4/0) Skip Tx CONNECT_CNF by mpLineTestMode
VM(1/4/0) FXO LoopCurrent detected      ← PSTN Line Connect
22 22 22 22 22 22 22 23 22 22 22 22 22 22… (dBm)     ← Detection Tone Level by DSP (Tone Level -22dBm)
22 22 22 22 22 22 22 23 22 22 22 22 22 22…
                        OR
VM(1/4/0) FXO no LoopCurrent      ← PSTN Line not Connect
63 63 63 63 63 63 63 63 63 63 63 63 63 63… (dBm)     ← Not Detection Tone Level by DSP
63 63 63 63 63 63 63 63 63 63 63 63 63 63…

Gateway(config-voice-port-1/4)# diagnosis on-hook
```

FXO Service Feature List

FXO Service Features	Polarity inverse detection function
	Caller-ID detection function
	PSTN backup or busy-out function with hook off in case of power down
	Clear down tone registration and detect function
	Hook flash timing setting function
	Ring detect timeout setting function
	Ring number setting function
	Voice-confirmed connect function

Polarity Inverse Detection Function

- Polarity inverse detection function
  - — The FXO port detects the polarity inverse signal coming from Legacy PBX
  - — When there is an incoming VoIP call via the FXO port to Legacy PBX, the gateway sends call connect message to Softswitch after detecting the polarity inverse signal on the FXO port.
  - — Using Polarity Inverse Signal, a accurate billing service is available.

When polarity inverse function is enabled

- In case of A flow, Billing is start when the director hooks off.
- In case of B flow, Billing is not start because manager port is busy or no answer

Polarity Inverse Detection Function

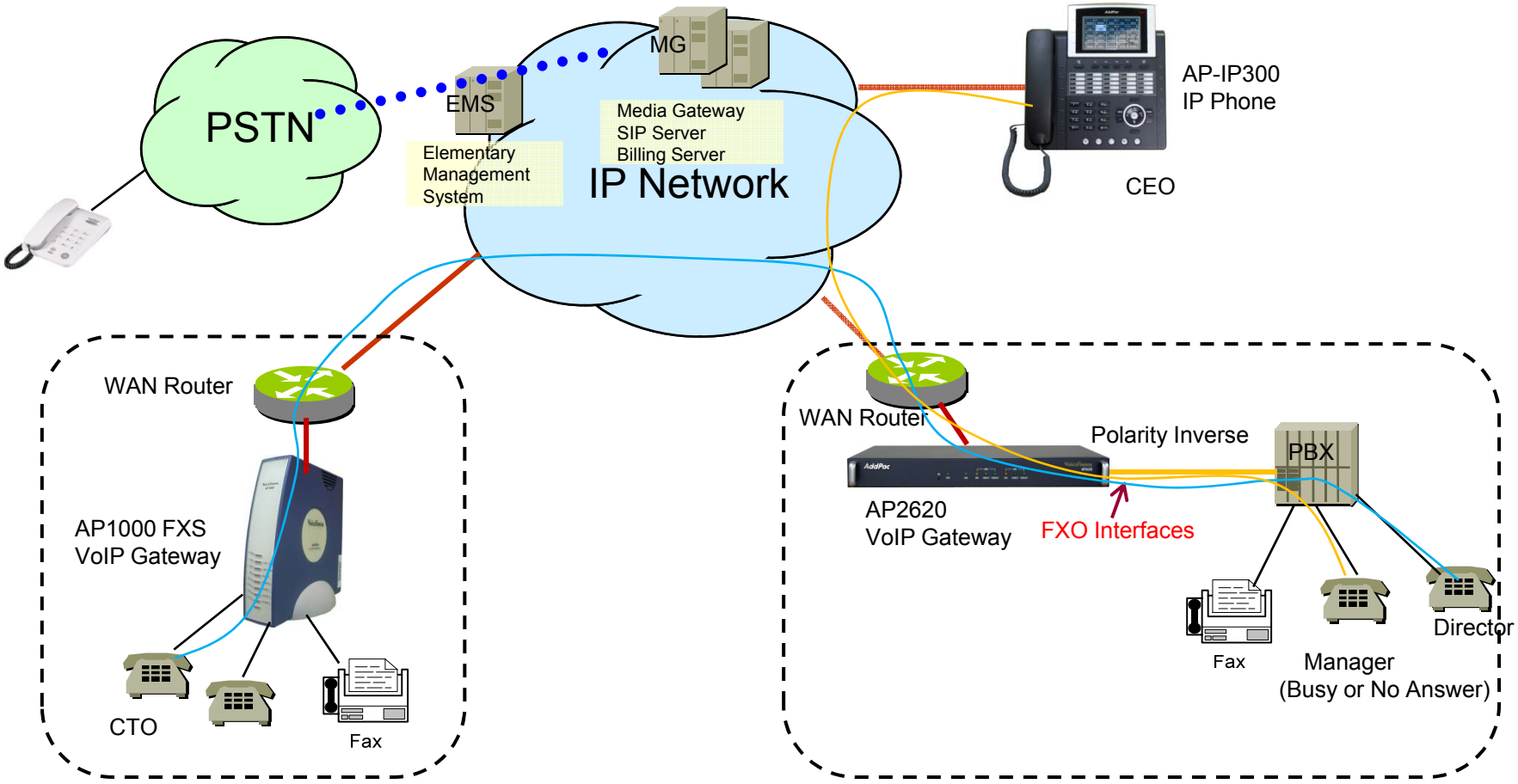

Caller ID Detect Function

- Caller-ID detection function
  - The FXO port is connected to PSTN or PBX, and is able to detect Caller-ID.
  - When a VoIP call is originated from the FXO port, the FXO port detects the caller-ID and uses the number as the VoIP calling party number.

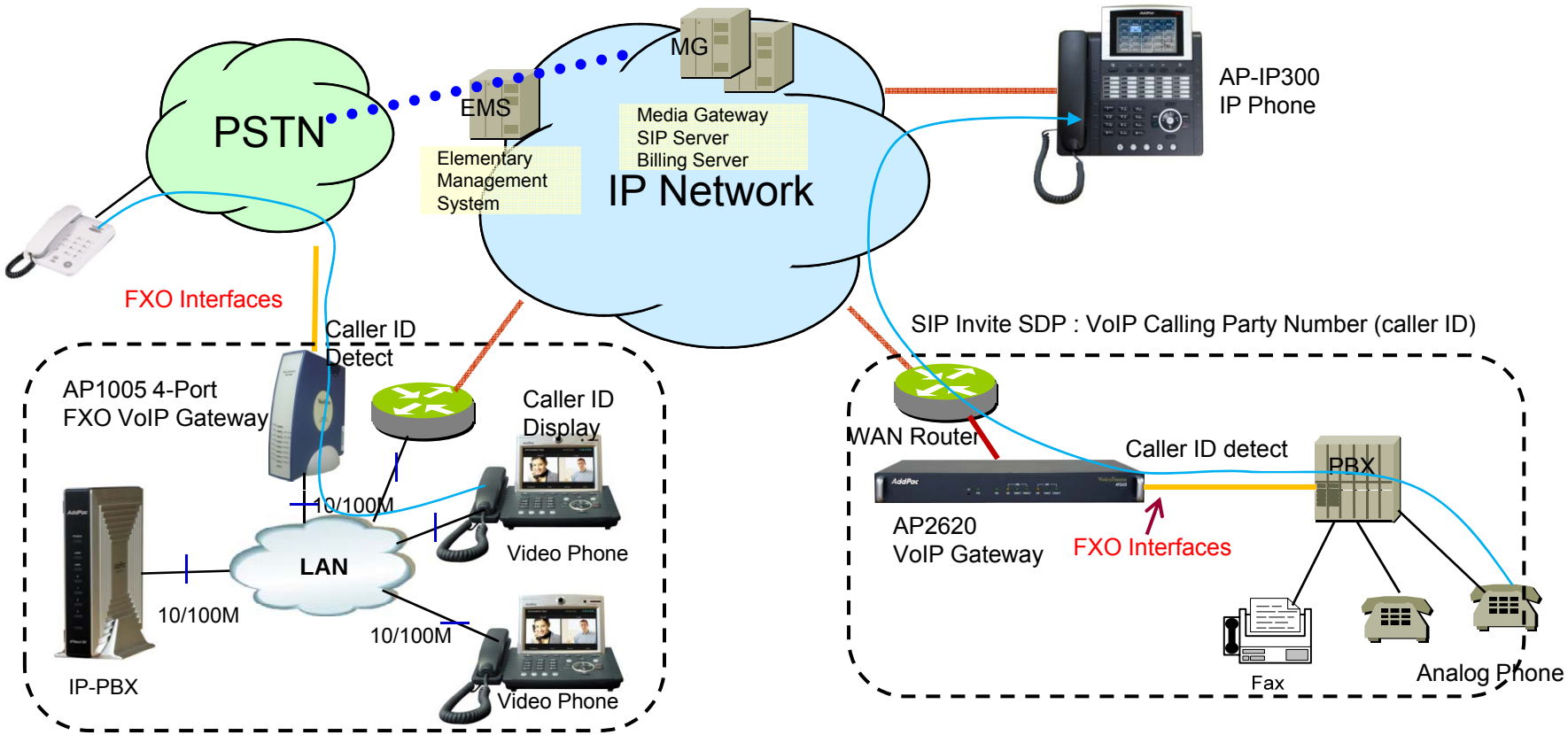

PSTN backup or busy-out function

- PSTN backup or busy-out function
  - VoIP call can not be made when the gateway is in busy out state. User can be communicated continually using PTSN backup function.
  - Busy Out State : LAN interface is down, Softswitch is down, etc

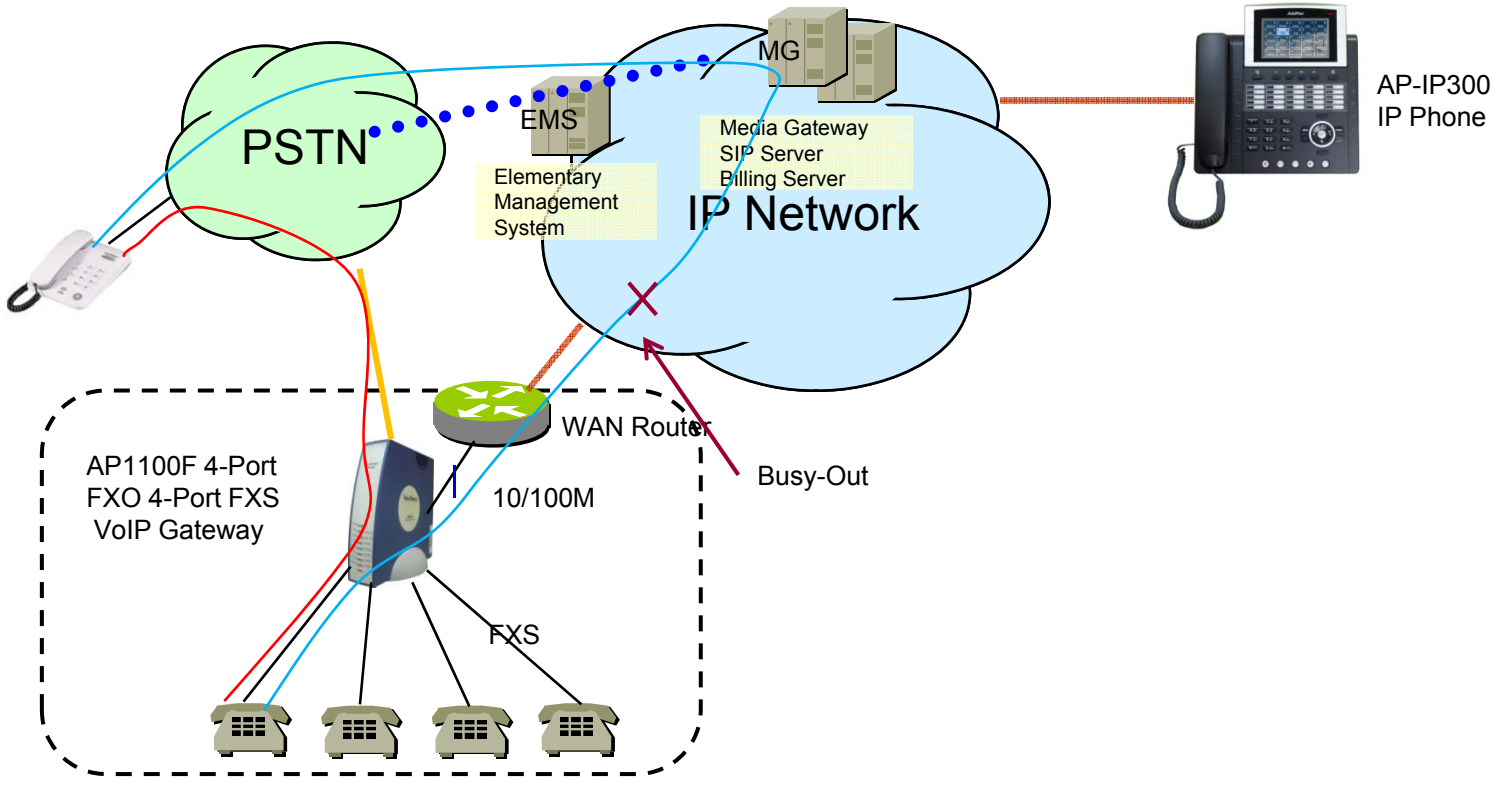

FXO Service Description

Features	Description
Voice-confirmed connect function	When FXO port is connected to PBX extension and the subscriber does take the call, connect message is not sent to sender side and billing is not included.
Ring number setting function	Use this command to set the maximum number of rings to be detected before answering a call over an FXO voice port. In that case, the FXO interface would answer if the equipment online did not answer the incoming call in the configured number of rings.
Clear down tone registration and detect function	Clear-down-tone detects call termination of FXO port connected to and generated from PSTN or PBX. The value of clear-down-tone (busy tone, fast busy tone) is different for each PSTN and PBX. So use voice class clear-down-tone for registration process in global configuration mode.
Hook flash timing setting function	Different from call-transfer, you need to press hook-flash button twice for conference call. Basically, it takes 500 ms (0.5 sec) to recognize hook-flash button from the AddPac gateway. If you think 500ms (0.5 sec) is too short, you can change hook-flash detect timeout value when hook-flash duration time of PBX is more than 500ms.

Thank you!

AddPac Technology Co., Ltd.
Sales and Marketing

Phone +82.2.568.3848 (KOREA)
FAX +82.2.568.3847 (KOREA)
E-mail sales@addpac.com