VoIP Gateway Series

FXO Service Features
(Clear-Down-Tone)



AddPac Technology

Sales and Marketing

Contents

- Clear-Down-Tone Detection Network Diagram
- Clear-Down-Tone Overview
- Clear-Down-Tone Trouble Shooting
  - Clear-Down-Cadence Feature
  - Force-Clear-Down Feature



Clear-Down-Tone Detection Network Diagram

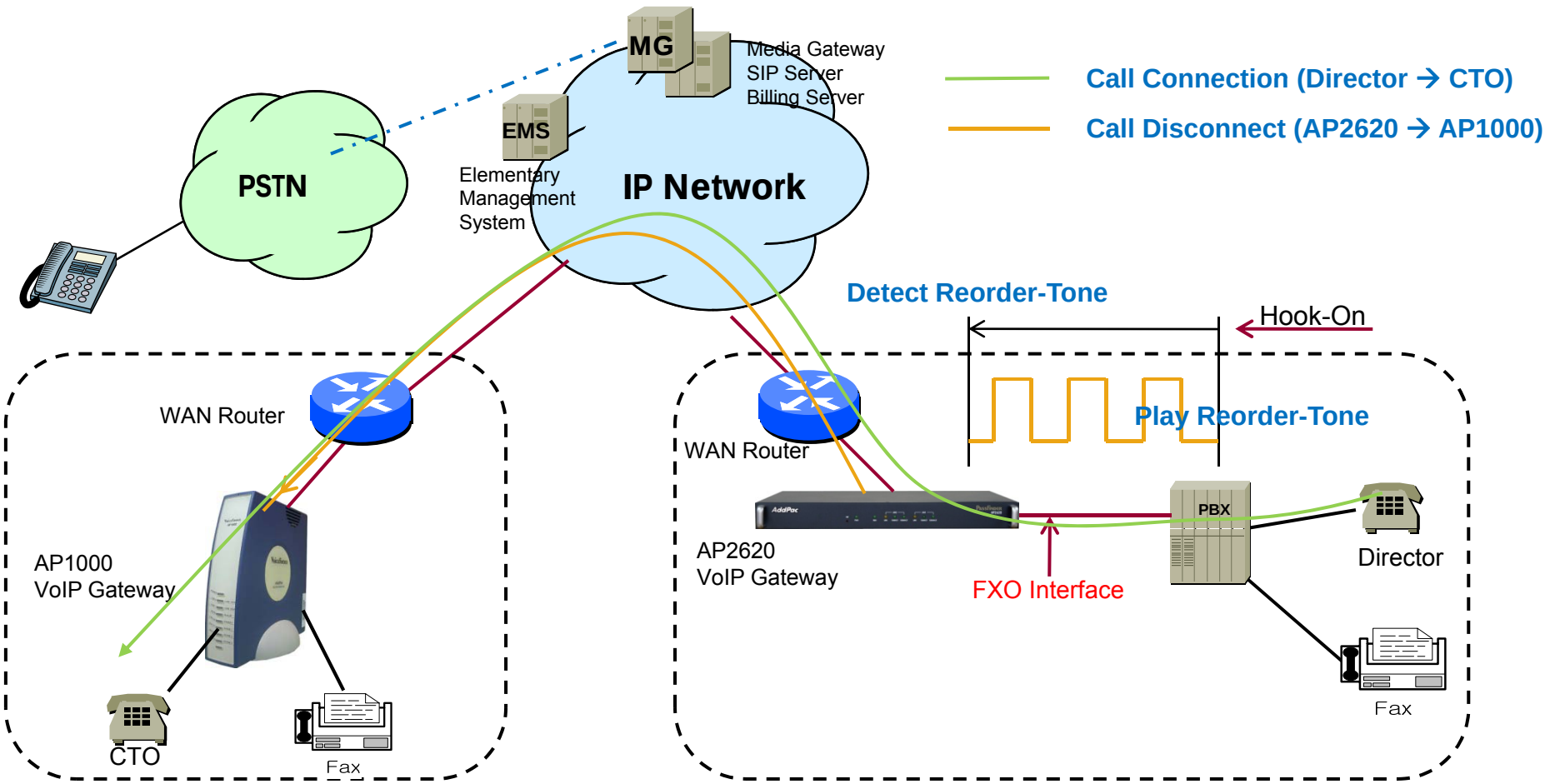

Clear-Down-Tone Overview

- Clear-Down-Tone
  - — Playing tone types for FXO call clear(disconnect) between PBX(or Keyphone) and VoIP Gateway
    - Line Busy Tone
    - Reorder Tone
    - Line Lock Tone
    - User Defined Clear Down Tone
  - — If user know about tone frequency and cadence of PBX clear-down-tone, AddPac VoIP gateway provide the call clear function by easy configuration via CLI

```
Tag Low(Hz) High(Hz) On1(ms) Off1(ms) On2(ms) Off2(ms) dBm Description
------------------------------------------------------------------------
  -    350     440    10000       0       0       0    -18 Dial tone
  -    440     480     1000    2000       0       0    -12 RingBack tone
  -    480     620      500     500       0       0    -12 LineBusy tone
  -    480     620      300     200       0       0    -12 Reorder tone
  -   1400    2060      100     100       0       0      0 LineLock tone
```

Clear-Down-Tone Trouble Shooting

- Clear-Down-Tone
  - — Clear-Down-Cadence
    - Usage : If FXO interface of VoIP gateway does not detect or recognize Clear-Down-Tone incoming from PBX side, VoIP Gateway can not perform Call Release procedure even though end user terminal in PBX is already hook on.

      This function detect Clear-Down-Tone by tone level not frequency , and clear call pending of FXO interface.

  - — Force-Clear-Down
    - Usage : FXO call clear using Voice Mute Detect Function.

      If tone level is lower than a specific value for some time in FXO interface, perform call clear procedure.

Clear-Down-Cadence Feature

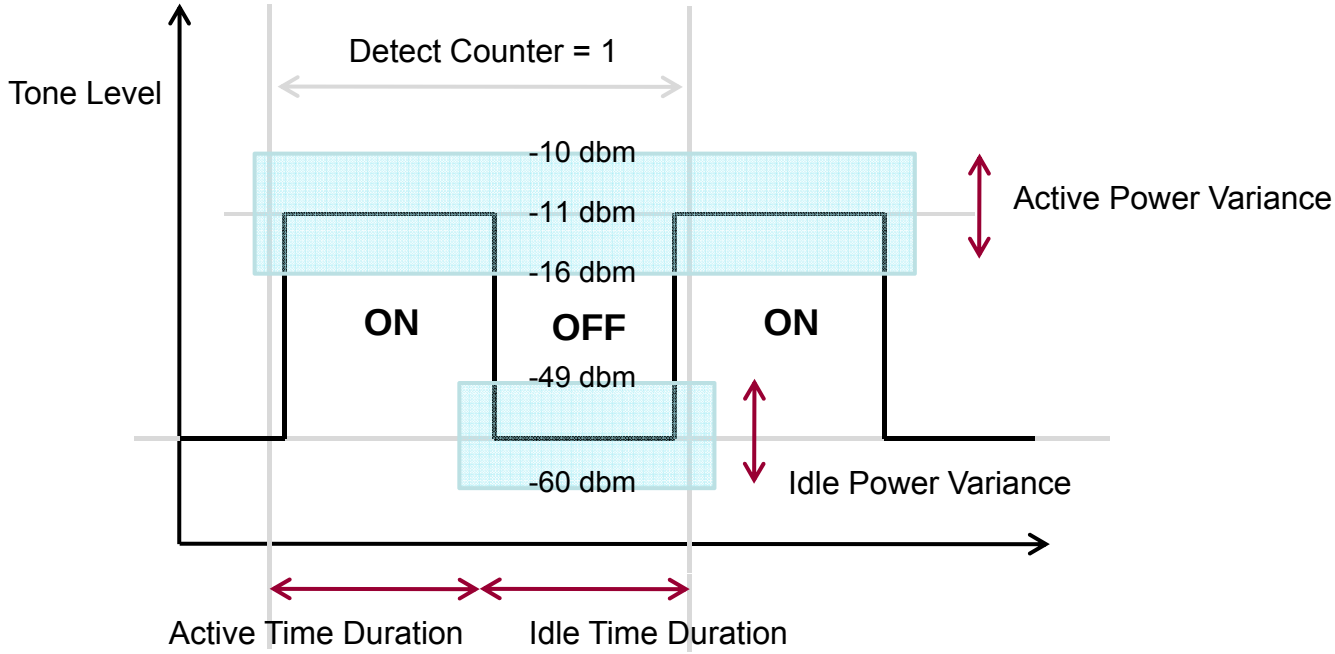

- Clear-Down-Cadence
  - Detect and analyze clear-down-tone incoming from PBX
  - Using detected clear-down-tone data, Active / Idle Time Duration and Active / Idle Power Variance information is applied to Clear-Down-Cadence parameter.
  - And then, Call Clear is possible by Clear-Down-Cadence Parameter.
  - Clear-down-cadency detection is performed more accurately using Detect Counter parameter (1,2,3, etc) for Call Clear.

Force-Clear-Down Feature

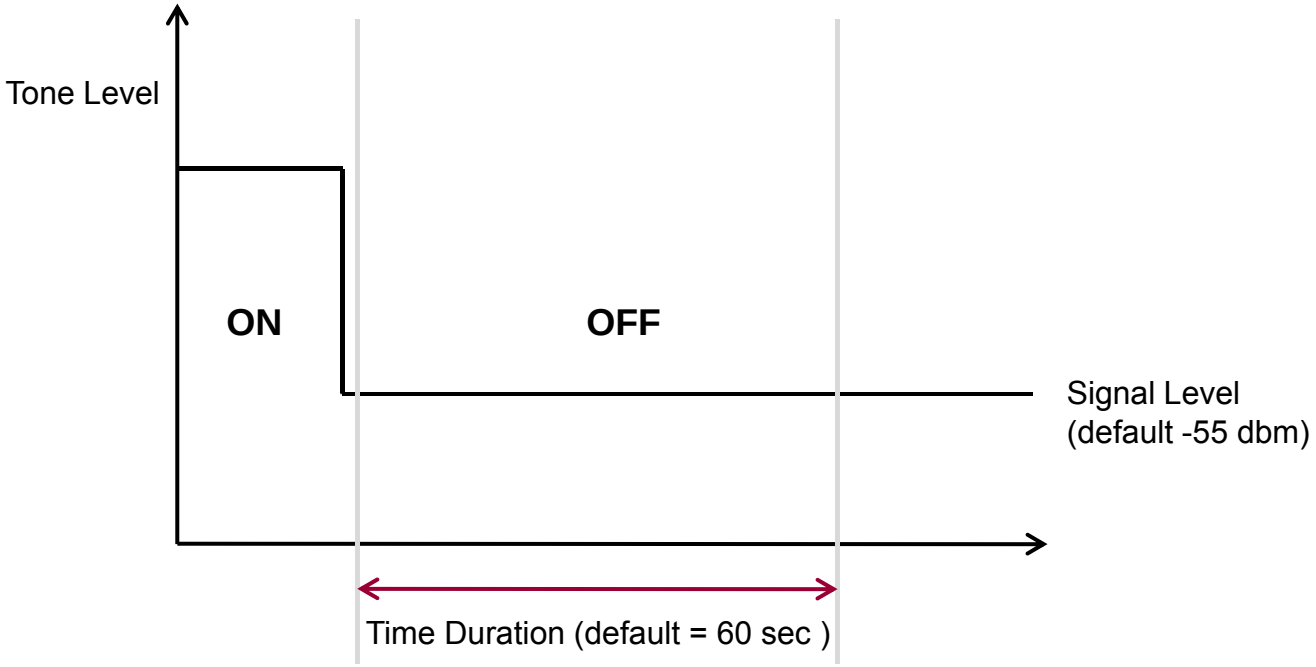

- Force-Clear-Down
  - If FXO port call is not cleared or disconnected by Clear-Down-Tone and Clear-Down-Cadence configuration, this Force-Clear-Down function can be used.
  - If tone level is lower than a specific value for some time in FXO interface after hook on, perform call clear procedure.

Thank you!

AddPac Technology Co., Ltd.
Sales and Marketing

Phone +82.2.568.3848 (KOREA)
FAX +82.2.568.3847 (KOREA)
E-mail sales@addpac.com