VoIP Gateway Series

SIP Protocol Debugging Service Overview



AddPac Technology

Sales and Marketing

www.addpac.com

Contents

- Network Diagram for SIP Debugging
- SIP Debugging Access Method via Console Port
- SIP Debugging Access Method via Telnet Port
- Real-time SIP Debugging Environment
- VoIP Debugging Command List
- SIP Debugging Commands(Example)

Network Diagram for SIP Debugging

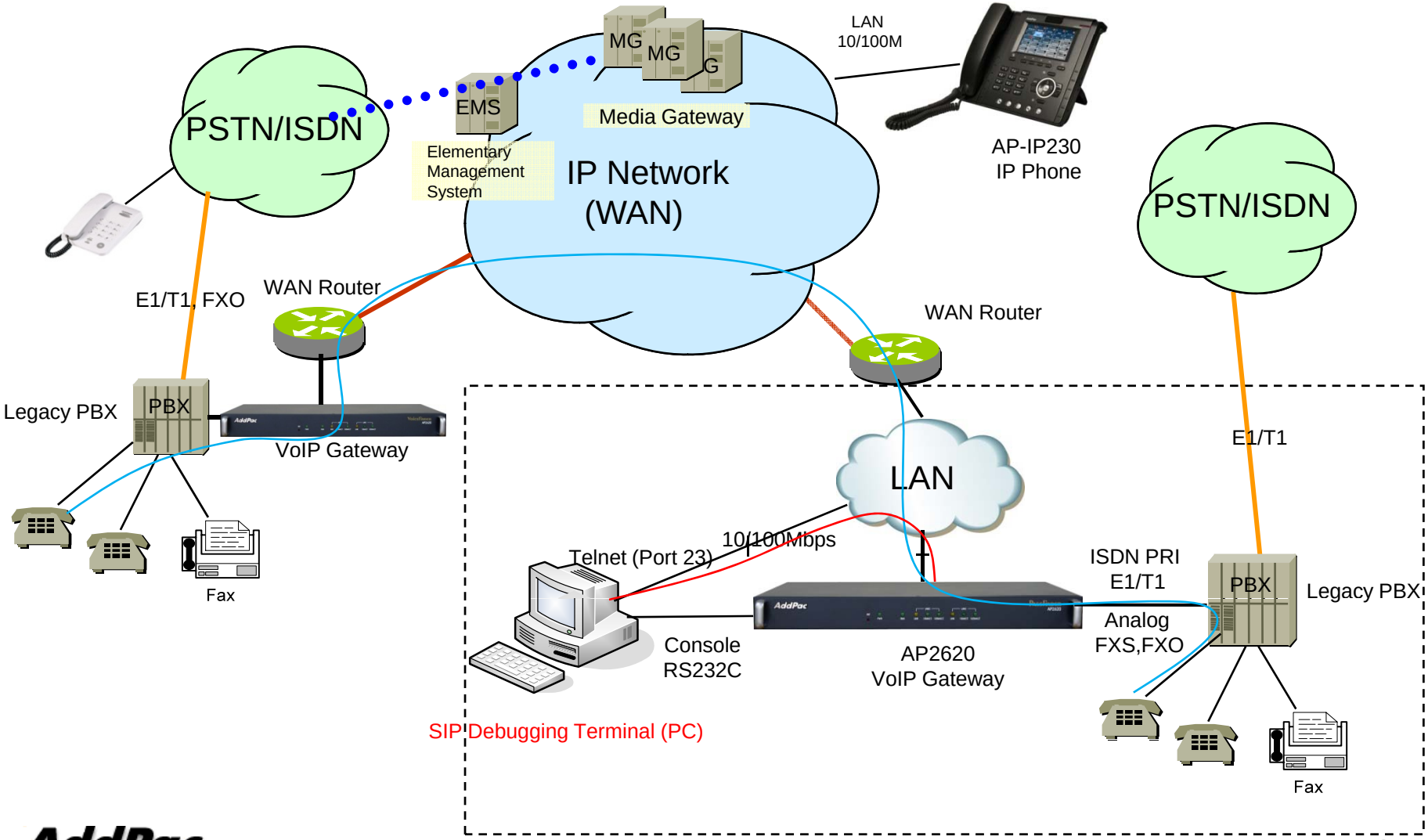

SIP Debugging Access Method via Console Port

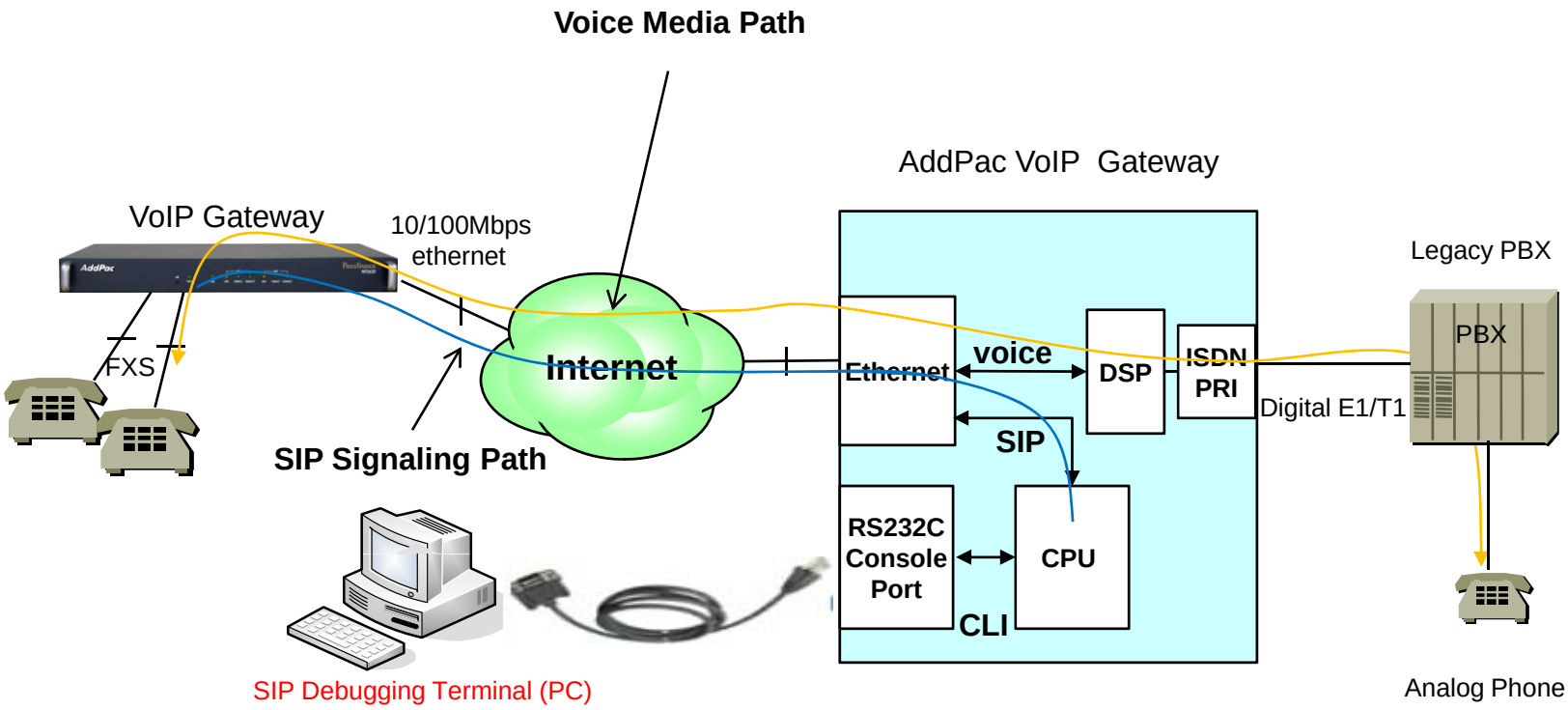

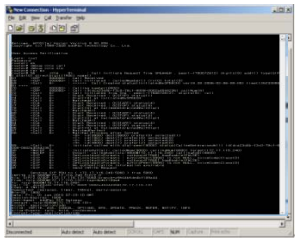

Windows HyperTerminal

CLI : Command Line Interface

SIP Debugging Access Method via Telnet Port

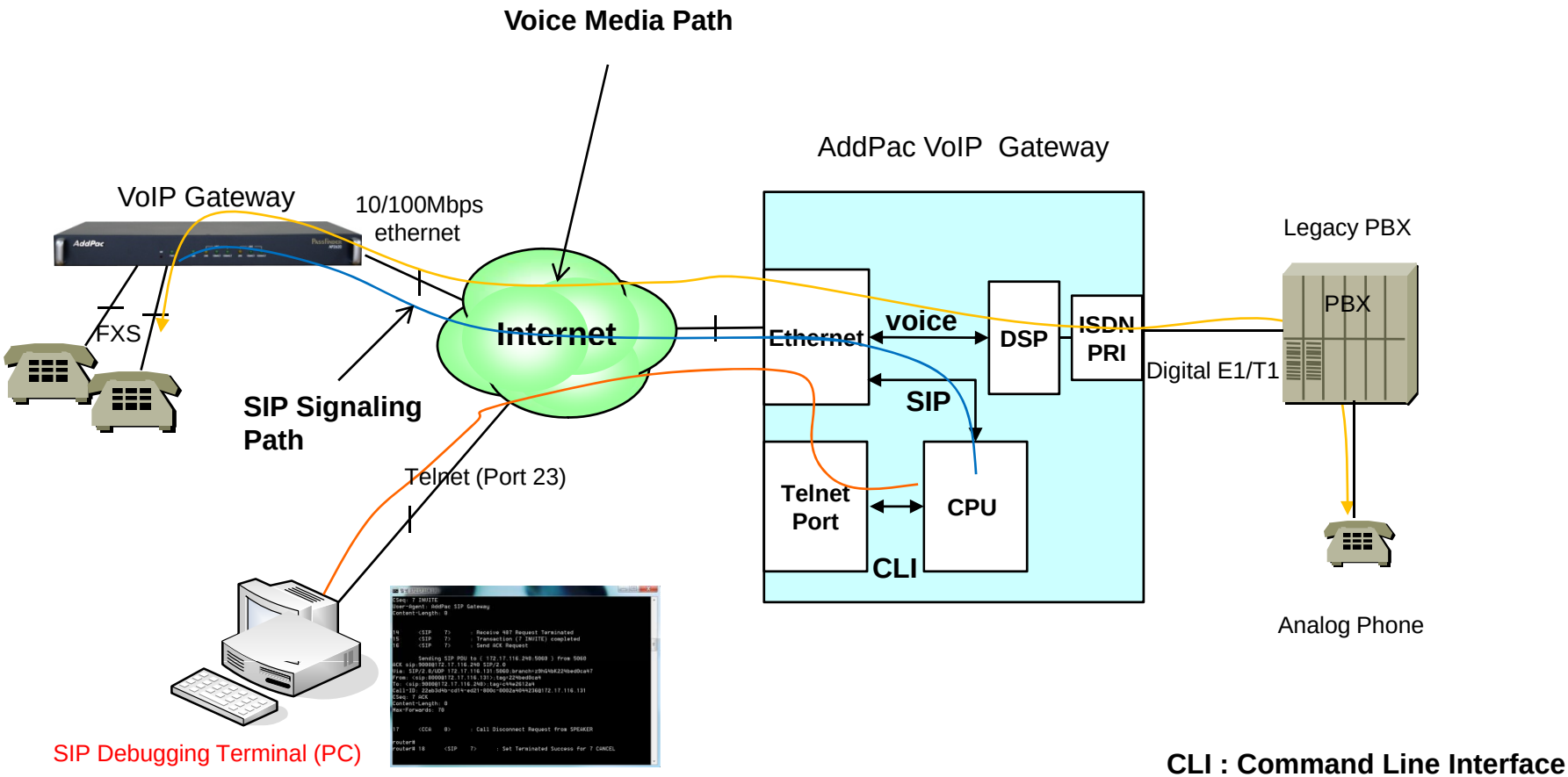

Real-time SIP Debugging Environment

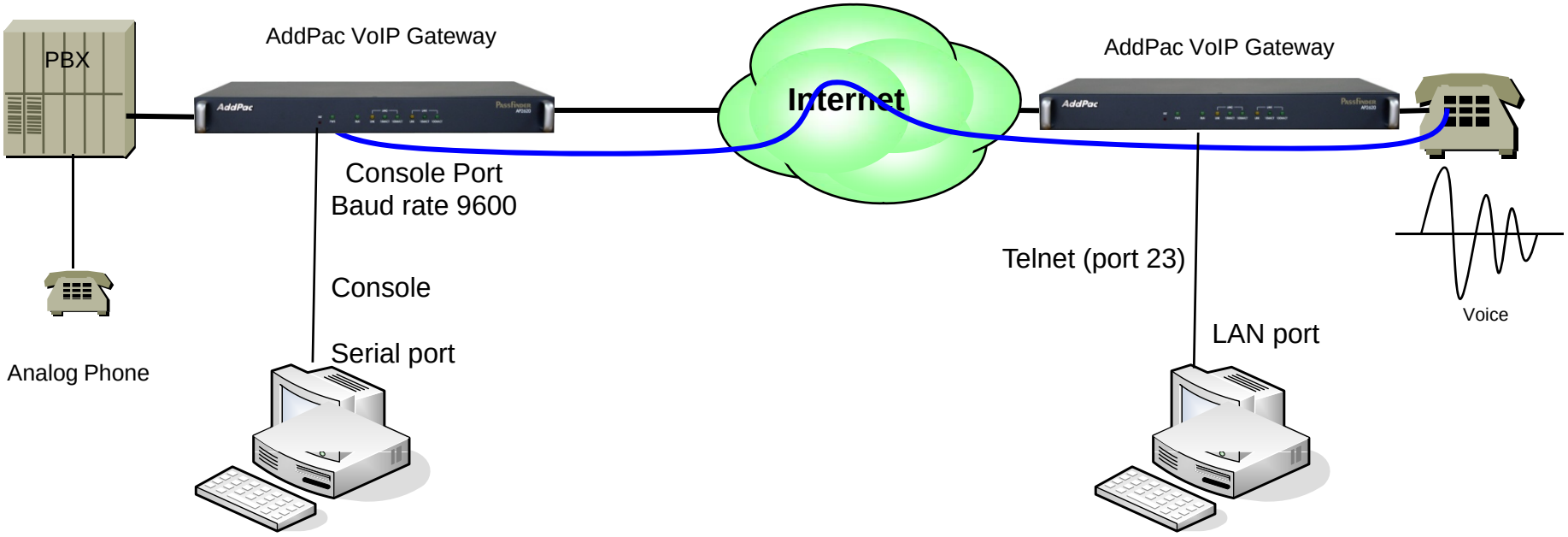

VoIP Debugging Commands

Major Command

Login: root
Password:
router> en
router# debug voip ? -> VoIP Debugging command
  h225-asn1 H.225 ASN.1 trace
  h245-asn1 H.245 ASN.1 trace
  ras-asn1 RAS ASN.1 trace
  call Call trace -> Call trace Debugging Command
  mgcp MGCP message trace
  number debug on a specific number (calling or called party number)
  port debug on a specific voice port
  sip SIP message trace -> SIP Message Debugging
router# **terminal monitor** -> Display SIP debug message through terminal
  Useful when debugging by remote accessing
router# **no termial monitor** -> Use when deactivate of debug command (valid when accessing telnet)

SIP Debugging Commands (Example)

```
Welcome, APOS(tm) Kernel Version 8.50.006.
Copyright (c) 1999-2008 AddPac Technology Co., Ltd.

User Access Verification

Login: root
Password:
router> en
router# debug voip call
router# debug voip sip
router# terminal monitor
router# 1     <CCA   0>    : Call Initiate Request from SPEAKER , peer(-
            1760673404) digits() addr() type(SIP) plar(0) directDigit(FALSE)
            name()
2     <CEP   000000> : Call Received
3     <CEP   000000> : Call Initiated : calledNumber() crv(0) total(0)
4     <Call  8>    : ******  Call Created status(InitiatedBySPEECH)
            ver(8.28:2006-02-06-00-00) time(1262390967) ****
5     <CEP   000000> : Calling number(8000)
6     <CEP   000000> : Call id(b78e3e4b-3c3f-2691-800e-0002a4044236)
            callNum(8)
7     <Call  8>    : Call Initiated from CCA : peer(-1760673404), digits(), ip()
8     <CCA   0>    : Digit Received : 9(START) status(1)
9     <CCA   0>    : Digit Received : 9(STOP) status(4)
10    <Call  8>    : Digit(9) at InitiatedBySPEECH
11    <Call  8>    : MatchedAll
12    <CCA   0>    : Digit Received : 0(START) status(4)
13    <CCA   0>    : Digit Received : 0(STOP) status(4)
14    <Call  8>    : Digit(0) at CalleeDeterminedWaitDigit
15    <Call  8>    : MatchedAll
16    <CCA   0>    : Digit Received : 0(START) status(4)
17    <CCA   0>    : Digit Received : 0(STOP) status(4)
18    <Call  8>    : Digit(0) at CalleeDeterminedWaitDigit
19    <Call  8>    : MatchedAll
20    <CCA   0>    : Digit Received : 0(START) status(4)
21    <CCA   0>    : Digit Received : 0(STOP) status(4)
22    <Call  8>    : Digit(0) at CalleeDeterminedWaitDigit
23    <Call  8>    : MatchedPerfect
24    <Call  8>    : MatchAllProcess After Sorted
```

```
<0> id(9999) dest(9000) prefer(0) selected(3)
                <1> id(1001) dest(T) prefer(0) selected(0)
                <2> id(1002) dest(T) prefer(1) selected(0)
                <3> id(3000) dest(T) prefer(2) selected(0)
25    <Call  8>    : Initiate callee with dial-peer(9000)
            status(CalleeDeterminedAll) id(b78e3e4b-3c3f-2691-800e-
            0002a4044236)
26    <NetEP 8>    : InitiateOutCall: calledNum(9000) callingNum(8000)
            target(172.17.116.240)
27    <NetEP 8>    : DoCall: calledAddr(sip:9000@172.17.116.240)
            callingAddr(8000)
28    <SIP   8>    : SetLocalAudioFormats : outbound(TRUE) hqaEnable(FALSE)
29    <SIP   8>    : SetLocalAudioFormats : myVoipPeer(9999) is not NULL,
            voiceCodecClass(0)
30    <SIP   8>    : SetLocalAudioFormats : outbound(TRUE) hqaEnable(FALSE)
31    <SIP   8>    : SetLocalAudioFormats : myVoipPeer(9999) is not NULL,
            voiceCodecClass(0)
32    <SIP   0>    : No authentication information available
33          <SIP   8>    : Send INVITE Request
 Sending SIP PDU to ( 172.17.116.240:5060 ) from 5060
INVITE sip:9000@172.17.116.240 SIP/2.0
Via: SIP/2.0/UDP 172.17.116.131:5060;branch=z9hG4bKbb4b310fa49
From: <sip:8000@172.17.116.131>;tag=bb4b310fa4
To: <sip:9000@172.17.116.240>
Call-ID: bb8e3e4b-0fa6-314b-800f-0002a4044236@172.17.116.131
CSeq: 9 INVITE
Supported: replaces, timer, 100rel, early-session
Min-SE: 1800
Date: Sat, 02 Jan 2010 00:09:31 GMT
Session-Expires: 1800
User-Agent: AddPac SIP Gateway
Contact: <sip:8000@172.17.116.131>
Accept: application/sdp
Allow: INVITE, ACK, CANCEL, OPTIONS, BYE, UPDATE, PRACK, REFER, NOTIFY,
            INFO
Allow-Events: talk, hold, conference
Content-Type: application/sdp
Content-Length: 304
Max-Forwards: 70
```

SIP Debugging Commands (Example)

```
v=0
o=8000 1262390971 1262390971 IN IP4 172.17.116.131
s=AddPac Gateway SDP
c=IN IP4 172.17.116.131
t=1262390971 0
m=audio 23016 RTP/AVP 0 8 18 4 2 9
a=ptime:20
a=rtpmap:0 PCMU/8000
a=rtpmap:8 PCMA/8000
a=rtpmap:18 G729/8000
a=rtpmap:4 G723/8000
a=rtpmap:2 G726-32/8000
a=rtpmap:9 G722/8000
 Received SIP PDU from ( 172.17.116.240:5060 )
SIP/2.0 100 Trying
Via: SIP/2.0/UDP 172.17.116.131:5060;branch=z9hG4bKbb4b310fa49
From: <sip:8000@172.17.116.131>;tag=bb4b310fa4
To: <sip:9000@172.17.116.240>
Call-ID: bb8e3e4b-0fa6-314b-800f-0002a4044236@172.17.116.131
CSeq: 9 INVITE
User-Agent: AddPac SIP Gateway
Content-Length: 0
34     <SIP    8>     : Receive 100 Trying
35     <SIP    8>     : Transaction (9 INVITE) proceeding

       Received SIP PDU from ( 172.17.116.240:5060 )
SIP/2.0 180 Ringing
Via: SIP/2.0/UDP 172.17.116.131:5060;branch=z9hG4bKbb4b310fa49
From: <sip:8000@172.17.116.131>;tag=bb4b310fa4
To: <sip:9000@172.17.116.240>;tag=384e3113a4
Call-ID: bb8e3e4b-0fa6-314b-800f-0002a4044236@172.17.116.131
CSeq: 9 INVITE
Supported: timer, replaces, early-session
User-Agent: AddPac SIP Gateway
Contact: sip:9000@172.17.116.240
RSeq: 223744
Require: 100rel
Content-Type: application/sdp
Content-Length: 434
```

```
Received SIP PDU from ( 172.17.116.240:5060 )
SIP/2.0 200 OK
Via: SIP/2.0/UDP 172.17.116.131:5060;branch=z9hG4bKbb4b310fa49
From: <sip:8000@172.17.116.131>;tag=bb4b310fa4
To: <sip:9000@172.17.116.240>;tag=384e3113a4
Call-ID: bb8e3e4b-0fa6-314b-800f-0002a4044236@172.17.116.131
CSeq: 9 INVITE
Supported: timer, replaces, early-session
Session-Expires: 1800;refresher=uac
User-Agent: AddPac SIP Gateway
Contact: sip:9000@172.17.116.240
Allow: INVITE, ACK, CANCEL, OPTIONS, BYE, UPDATE, REFER, NOTIFY, INFO
Require: timer
Content-Length: 0


43     <SIP    8>     : Receive 200 OK
44     <SIP    8>     : Received INVITE OK response
45     <SIP    8>     : Send ACK Request

       Sending SIP PDU to ( 172.17.116.240:5060 ) from 5060
ACK sip:9000@172.17.116.240 SIP/2.0
Via: SIP/2.0/UDP 172.17.116.131:5060;branch=z9hG4bKbb4b310fa49
From: <sip:8000@172.17.116.131>;tag=bb4b310fa4
To: <sip:9000@172.17.116.240>;tag=384e3113a4
Call-ID: bb8e3e4b-0fa6-314b-800f-0002a4044236@172.17.116.131
CSeq: 9 ACK
Content-Length: 0
Max-Forwards: 70

router#
router# no terminal monitor
```

Thank you!

AddPac Technology Co., Ltd.
Sales and Marketing

Phone +82.2.568.3848 (KOREA)
FAX +82.2.568.3847 (KOREA)
E-mail sales@addpac.com