AP1000™
4 Port Analog Gateway

High Performance VoIP Gateway Solution

Design Concept



AddPac Technology

Sales and Marketing

www.addpac.com

Contents

AP1000 VoIP Gateway

- Hardware Specification
- Hardware Block Diagram

Hardware Specification

AP1000 VoIP Gateway

- **RISC Microprocessor Computing Power**
- **Powerful DSP for G.7xx Voice Codec & T.38 FAX**
- **PSTN Backup Interface for Internet or Power Fault**
- **High quality Voice Interface**
  - 4-Port FXS Interface
- **Network Interface**
  - Two(2) 10Mbps Fast Ethernet
  - One(1) RS-232C Console Interface for Cisco Style CLI
- **Power Supply**
  - External Power Adaptor (5V, 2A)

Hardware Logical Diagram

AP1000 VoIP Gateway

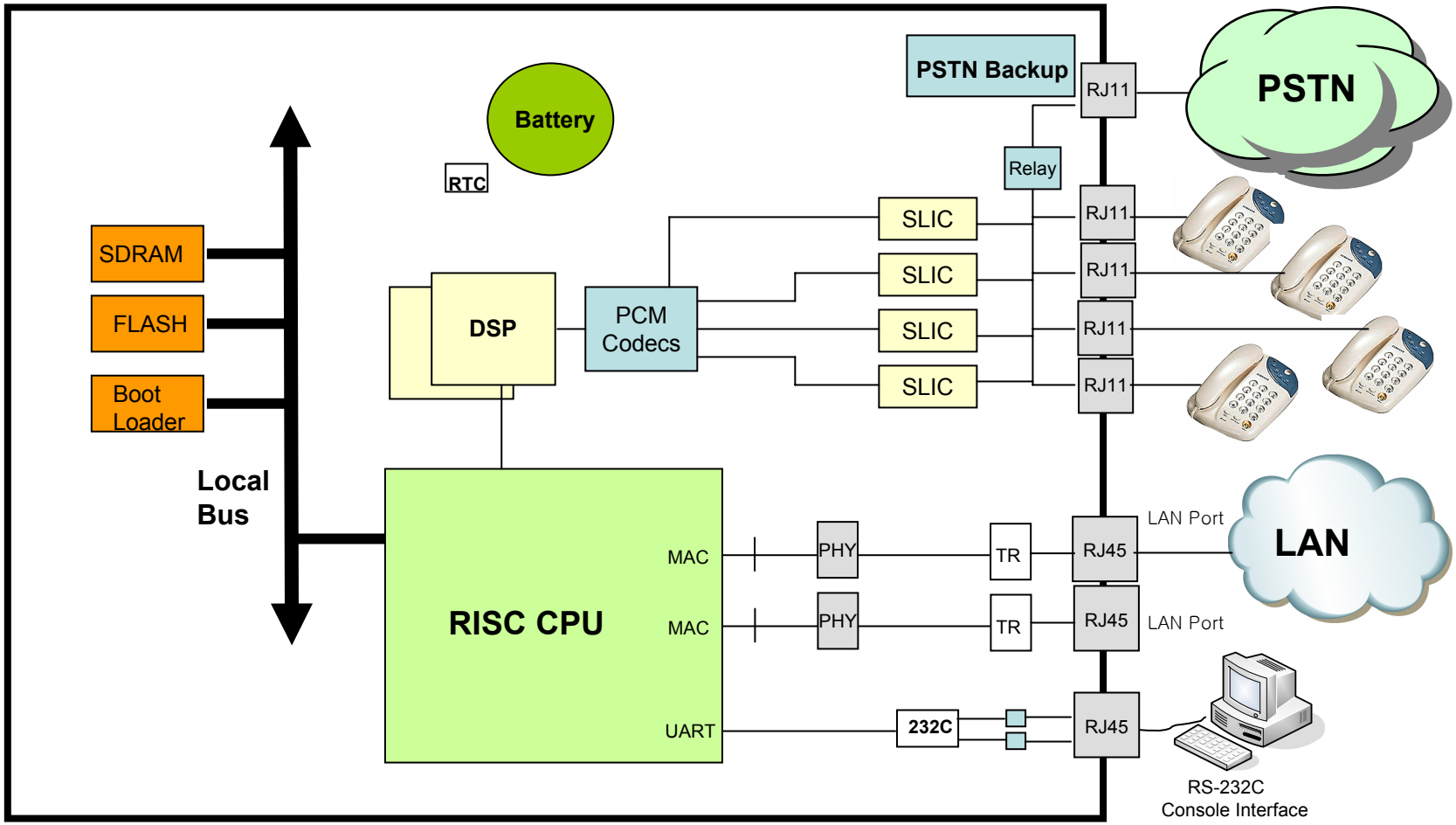

Thank you!

AddPac Technology Co., Ltd.
Sales and Marketing

Phone +82.2.568.3848 (KOREA)
FAX +82.2.568.3847 (KOREA)
E-mail sales@addpac.com