AP-PSU32
32 Port Remote Power Supply Unit

High Performance Remote Power Supply Unit for Hybrid SIP Call Box

Product Overview



AddPac Technology

Sales and Marketing

Contents

- Product Overview
- Hardware Specification
- Network Diagram
- Ordering Information

Product Overview

AP-PSU32 32 Port Remote Power Supply Unit

- PoE based 32 Port Remote Power Supply Unit
- Analog Line + Power over Ethernet Hybrid Solution
- IP based Remote Device Power ON/OFF Control
- Remote Power Control Port (-48V)
  - 32 Port Analog Line Input (RJ45)
  - 32 Port Power Embedded Analog Line Output (RJ45)
- Network Interface
  - Two(2) 10/100Mbps Fast Ethernet Interface
  - One(1) RS232C Interface
- Firmware Upgradeable Architecture(FTP, TFTP)
- Smart Web Manager Support
- Internal Power Supply

Hardware Specification

AP-PSU32 32 Port Remote Power Supply Unit



- RISC Microprocessor Computing Power
- Status LED Support
- Remote Analog Line Power Supply (-48V)
  - 32 Port Analog Line Input (RJ45)
  - 32 Port Power Embedded Analog Line Output (RJ45)
- Network Interface
  - Two(2) 10/100Mbps Fast Ethernet (RJ45)
  - One(1) RS-232C Interface (RJ45)
- Internal Power Supply

Hardware Specification

AP-PSU32 32 Port Remote Power Supply Unit

RISC CPU

Front Side

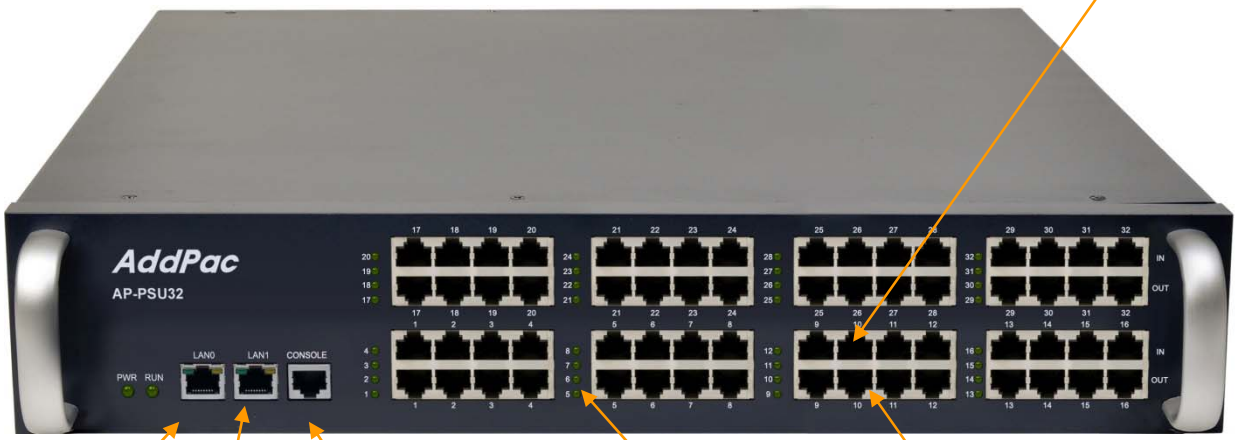

Hardware Specification

AP-PSU32 32 Port Remote Power Supply Unit

RISC CPU

Rear Side



Power Input #0

Network Diagram

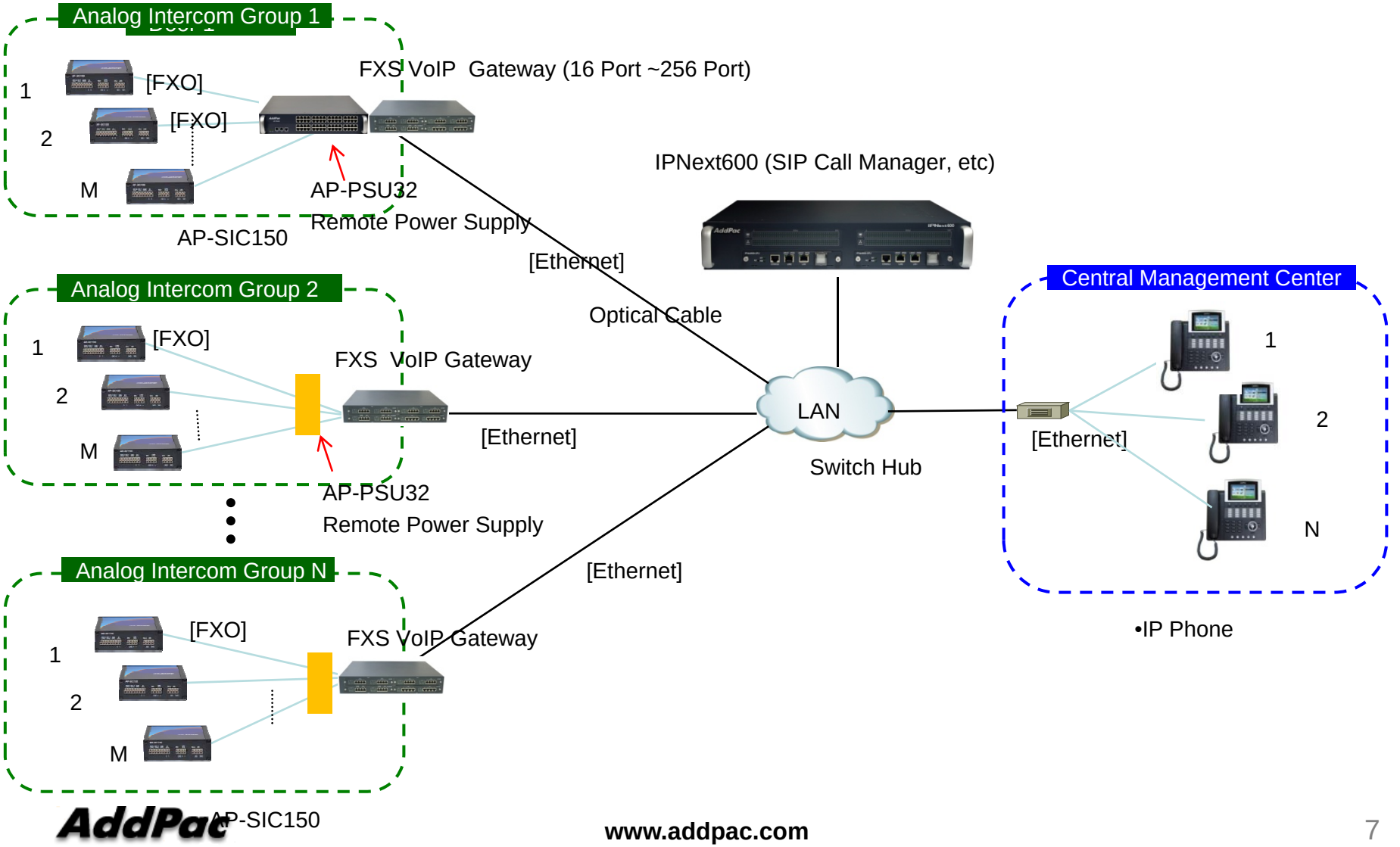

Ordering Information

- **AP-PSU32 32 Port Remote Power Supply Unit**
  - AP-PSU32 Main Body
  - RISC Microprocessor
  - 32 Port Analog Input(RJ45), 32 Port Analog Output with Power Line (RJ45)
  - Two(2) 10/100Mbps Fast Ethernet, RS232C Console Port
  - Internal Power Supply
  - Including Network Cable Set & Power Supply Cable, etc.
- **Built-in APOS Internetworking Software for AP-PSU32**
- **Including 1 Year Hardware Warranty**
- **Product Documents**
  - Install and Operation Guide (PDF)
- **Pricing**
  - AddPac Technology Regional Sales Manager
  - Authorized Sales and Marketing Representatives
  - Please Contact www.addpac.com

Thank you!

AddPac Technology Co., Ltd.
Sales and Marketing

Phone +82.2.568.3848 (KOREA)
FAX +82.2.568.3847 (KOREA)
E-mail sales@addpac.com