AP-SIC150

Hybrid SIP Intercom Call Box

High Performance Hybrid SIP Intercom Call Box Solution

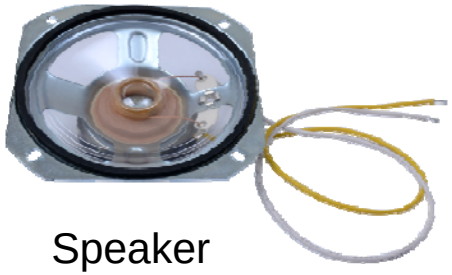

Speaker

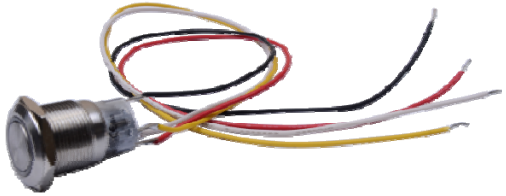

Call Button

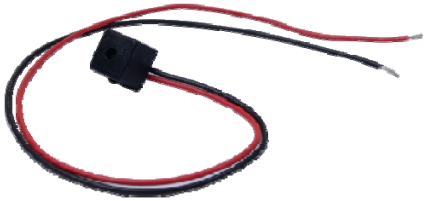

MIC



AddPac Technology

Sales and Marketing

Contents

- Product Overview
- Hardware Specification
- Software Service
- Audio & Voice Service and Features
- Network Service and Features
- Application Area
- Ordering Information

Product Overview

AP-SIC150 Hybrid SIP Intercom Call Box

- High Performance SIP Intercom Call Box for Custom Solution
- Full Duplex Voice Communication with Acoustic Echo Canceller
- One(1) 10/100Mbps Fast Ethernet
- PoE(Power over Ethernet) Support
- FXO PSTN Analog Interface Support for Long Distance Line
- High Quality Speaker Phone Features
- SIP VoIP Signaling Stack Embedded
- Various Voice Codec Support : G.711, G.726, G.729.1, etc
- Powerful Network Protocols (PPPoE, DHCP, Static Routing, etc)
- Firmware Upgradeable Architecture
- Advanced Voice QoS Mechanism
- Smart Web Manager
- External MIC, Speaker, Call Button, LED interface support

Product Highlights

AP-SIC150 Hybrid SIP Intercom Call Box

SIP Intercom Call Box +
Analog FXO Line Interface

Excellent Voice Quality
G.726/G,711/G.729/G.723, etc

External MIC, SPEAKER,
Call Button, LED

Full Duplex,
Acoustic Echo Canceller

High Performance RISC CPU
(Embedded DSP for Codec)



Smart Web Manager
Support

Various Call Control
Scenario Support (IP-PBX)

APOS™Technology
Network Protocol

State-of-art Signaling
SIP Stack

IP based Network Protocol
& Video/Voice Traffic QoS

Broadband IP Networking
With a 10/100Mbps Ethernet

PoE(Power over Ethernet) Support

Multimedia Service

AP-SIC150 Hybrid SIP Intercom Call Box

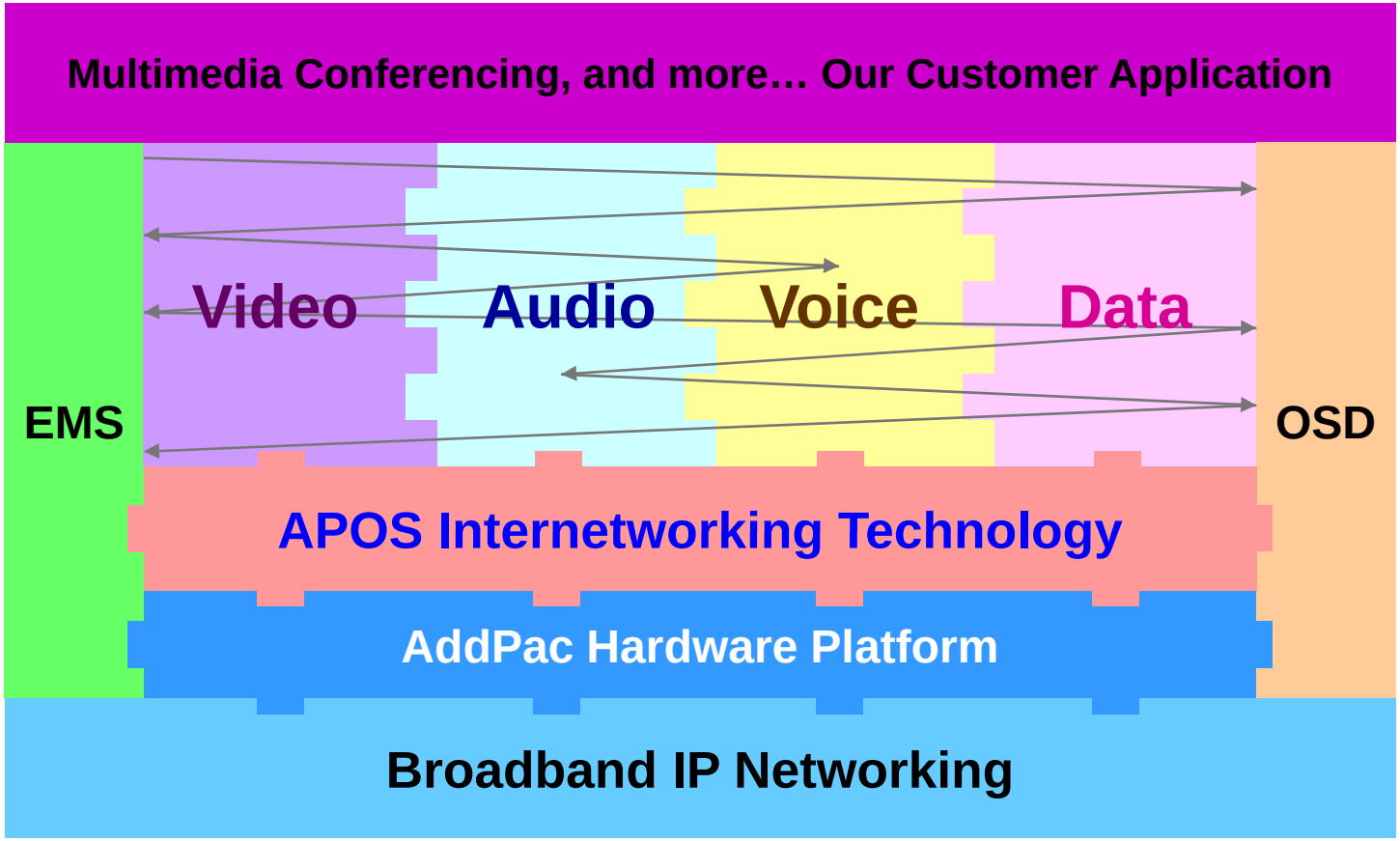

- APOS : AddPac Internetworking Operating System
- OSD : On- Screen Display
- EMS : Element Management System

Hardware Specification

AP-SIC150 Hybrid SIP Intercom Call Box

- RISC+DSP Microprocessor Computing Power
- Network Interface
  - One(1) 10/100Mbps Fast Ethernet
- FXO Analog Line Interface
- External MIC, SPEAKER, Call Button, LED Interface
- Alarm & Relay Out Interface
- Power Supply
  - Power over Ethernet (Option)
  - External Power Adaptor

Hardware Specification

AP-SIC150 Hybrid SIP Intercom Call Box

Front



Back

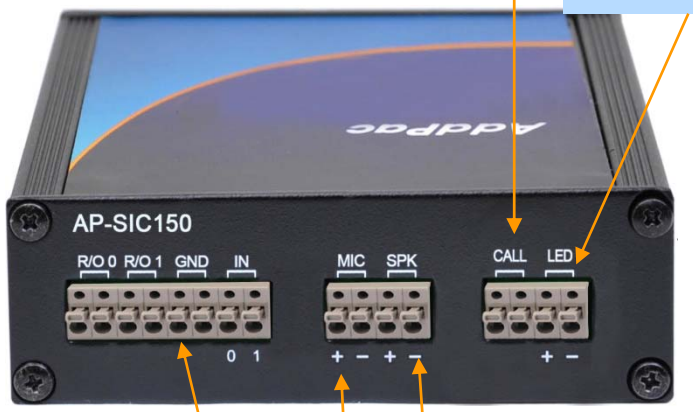

External Call Button Input

External LED Output

External Power Input

Analog FXO Port

Analog FXO Port
+ PoE

Fast Ethernet LAN Port
(PoE Option)

External MIC Input

External Speaker Out

Alarm & Relay Ports

Hardware Specification

AP-SIC150 Hybrid SIP Intercom Call Box

Power Supply



Example



Software Service

AP-SIC150 Hybrid SIP Intercom Call Box

- Built-in AddPac APOS Internetworking Software
  - Scalability, Functionality, and Stability Features
  - Audio Traffic QoS Control
- Programmable Video, Audio, and Voice Services
  - Audio, and Voice Codec
- Firmware Upgradeable Architecture
- Industry Standard IP based Network Protocol Features

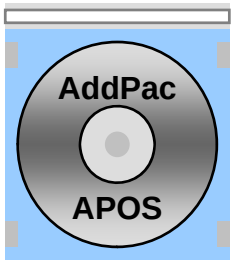

Network Service and Features

AP-SIC150 Hybrid SIP Intercom Call Box

- Network Managements
  - Standard SNMP Agent (MIB v2) Support
  - Remote Management using Console, Telnet
  - Web based Management using HTTP Server Interface
- Security Functions
  - Standard & Extended IP Access List
  - Enable/Disable for Specific Network Protocols
  - Multi-level User Account Management
  - Auto-disconnect for Telnet/Console Sessions
  - PPP User Authentication Supports (PAP & CHAP)
- Operation & Managements
  - System Performance Analysis for Process, CPU, Connection Interface
  - Debugging, System Auditing, and Diagnostics Support
  - System Booting and Auto-rebooting with Watchdog Feature
  - System Managements with Data Logging
  - IP Traffic Statistics with Accounting

Network Service and Features

AP-SIC150 Hybrid SIP Intercom Call Box

- Network Managements
  - DHCP Server & Relay Functions
  - Network Address Translation (NAT) Function
  - Port Address Translation (PAT) Function
  - Transparent Bridging (IEEE Standard) Function
    - Spanning Tree Bridging Protocol Support
    - Remote Bridging Support
    - Concurrent Routing and Bridging Support
  - Cisco Style Command Line Interface (CLI)
  - Network time Protocol (NTP) Support

Application

- SIP Intercom Application (PoE)
- Analog FXO Intercom Application for Long Distance (Local Power)
- Analog FXO + Remote Power Supply Application

SIP Intercom Call Center Application

AP-SIC150 Hybrid SIP Intercom Call Box

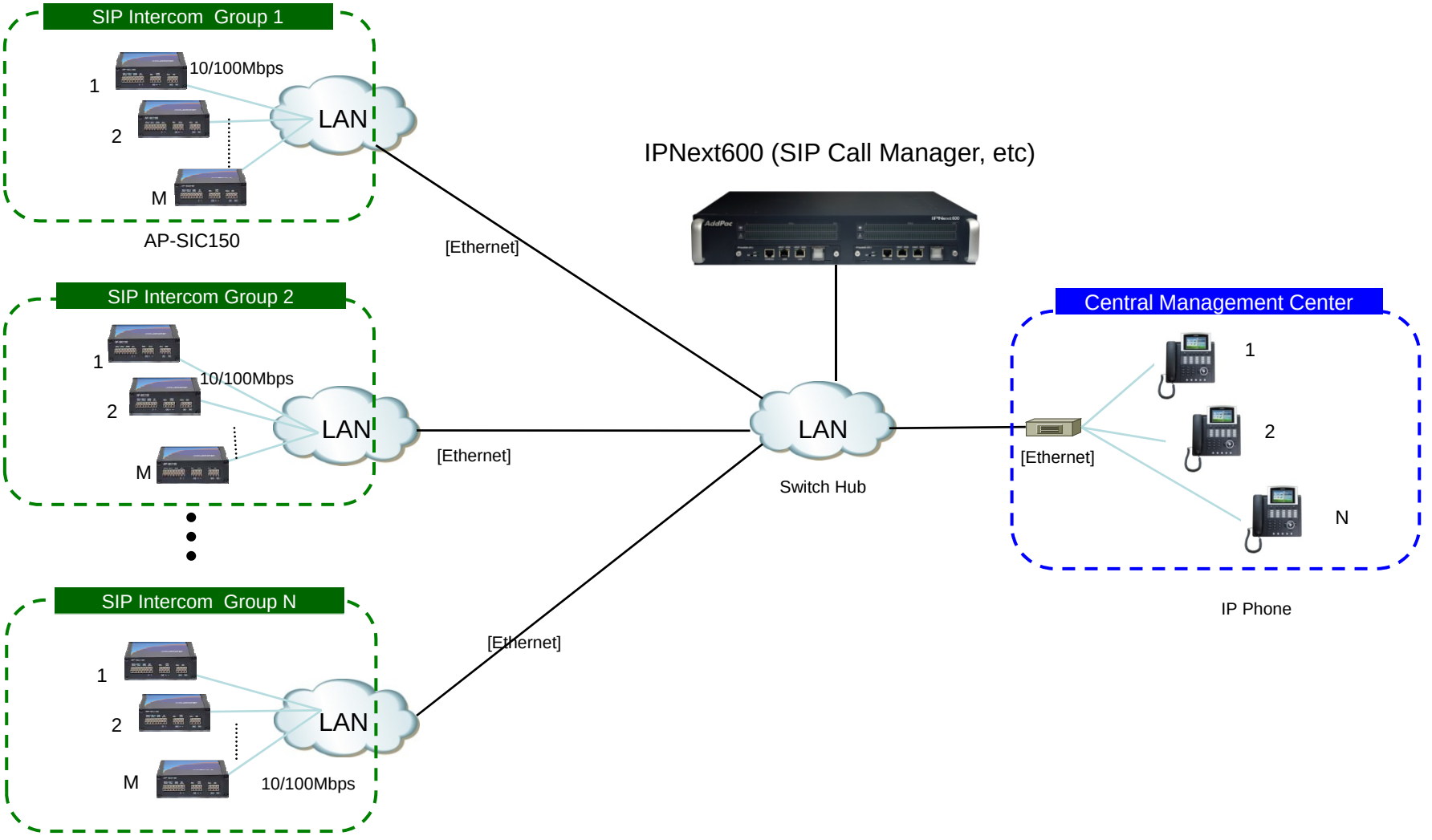

Analog FXO Intercom Call Center Application

AP-SIC150 Hybrid SIP Intercom Call Box

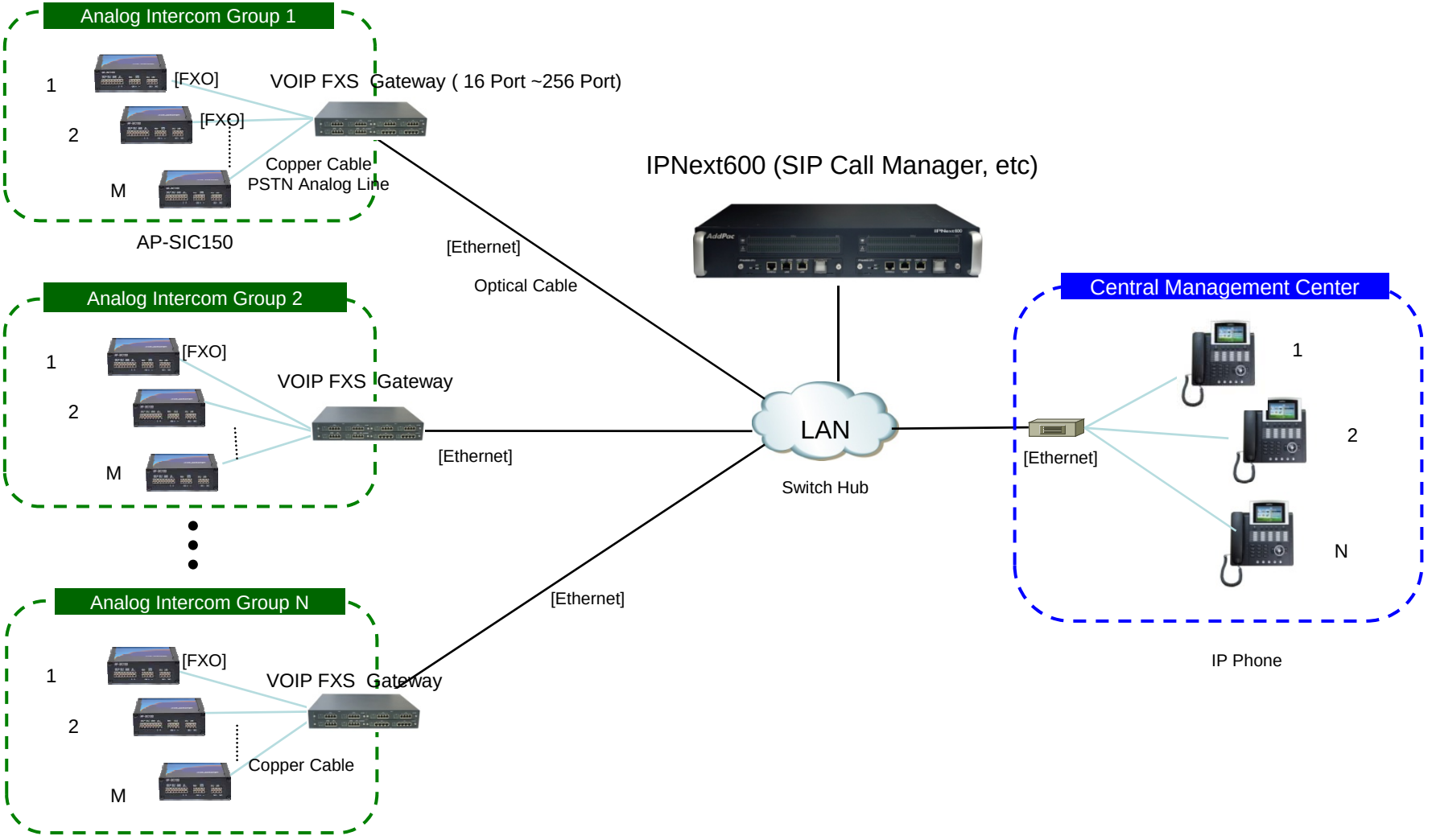

Analog FXO + Remote Power Supply Intercom Call Center Application

AP-SIC150 Hybrid SIP Intercom Call Box

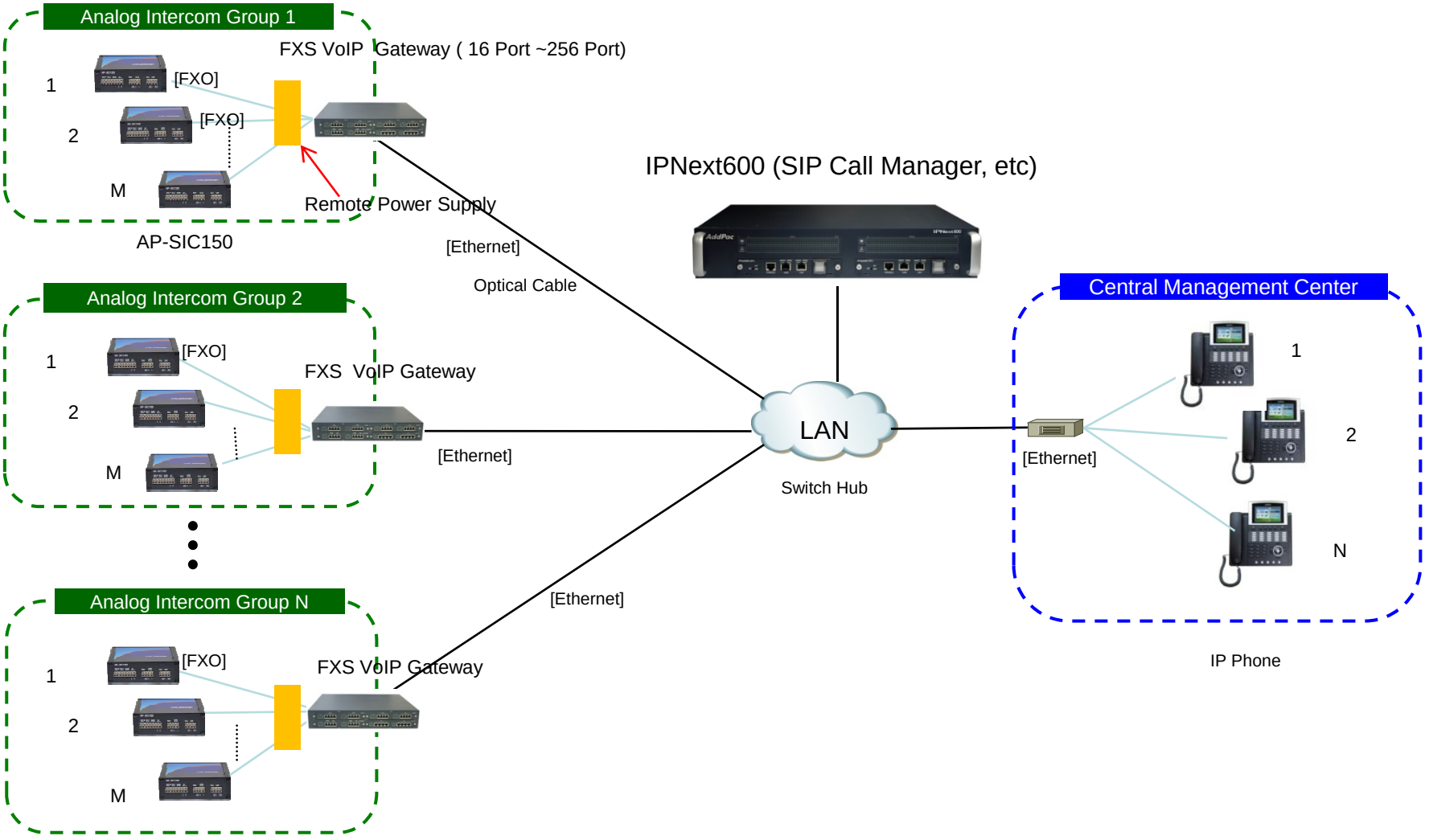

Ordering Information

- AP-SIC150 Hybrid SIP Intercom Call Box Hardware
  - AP-SIC150 Hybrid SIP Intercom Call Box Main Body
  - RISC Microprocessor with Embedded DSP Architecture
  - One(1) 10/100Mbps Fast Ethernet
  - FXO Analog Line Interface
  - External MIC, SPEAKER, Call Button, LED
  - Power over Ethernet (PoE) : option
- Built-in APOS Internetworking Software for AP-SIC150
- Including 1 Year Hardware Warranty
- Product Documents
  - Install and Operation Guide (PDF)
- Pricing
  - AddPac Technology Regional Sales Manager
  - Authorized Sales and Marketing Representatives
  - Please Contact www.addpac.com

Thank you!

AddPac Technology Co., Ltd.
Sales and Marketing

Phone +82.2.568.3848 (KOREA)
FAX +82.2.568.3847 (KOREA)
E-mail sales@addpac.com