AP-PSB2000
IP based Power Switch Box

High Performance IP Power Switch Box for LED Light Power Control

3’rd Party API Overview



AddPac Technology

Sales and Marketing

Contents

- Product Overview
- Hardware Specification
- 3’rd Party API Overview



Product Overview

AP-PSB2000 IP Power Switching Box

- IP based Remote Power ON/OFF Controller
- LED Light On/Off Control for CCTV Camera at Night Time
- Remote CCTV Backlight Control Solution for Unmanned Security Zone
- AddPac Integrated Security Management System Solution
- Power Control Port
  - One(1) AC Power Input
  - Three(3) AC Power Output (Manual Power On/Off Switch)
- Network Interface
  - One(1) 10/100Mbps Fast Ethernet Interface
  - One(1) RS232C Interface
- Firmware Upgradeable Architecture(FTP, TFTP)
- Smart Web Manager Support

Hardware Specification

AP-PSB2000 IP Power Switching Box for LED Light Power Control



- RISC Microprocessor Computing Power
- Status LED Support
- Power Control Interface
  - One(1) AC Input
  - Three(3) AC Output
- Network Interface
  - One(1) 10/100Mbps Fast Ethernet (RJ45)
  - One(1) RS-232C Interface (RJ45)

Hardware Specification

AP-PSB2000 IP Power Switching Box for LED Light Power Control

RISC CPU

Hardware Block Diagram

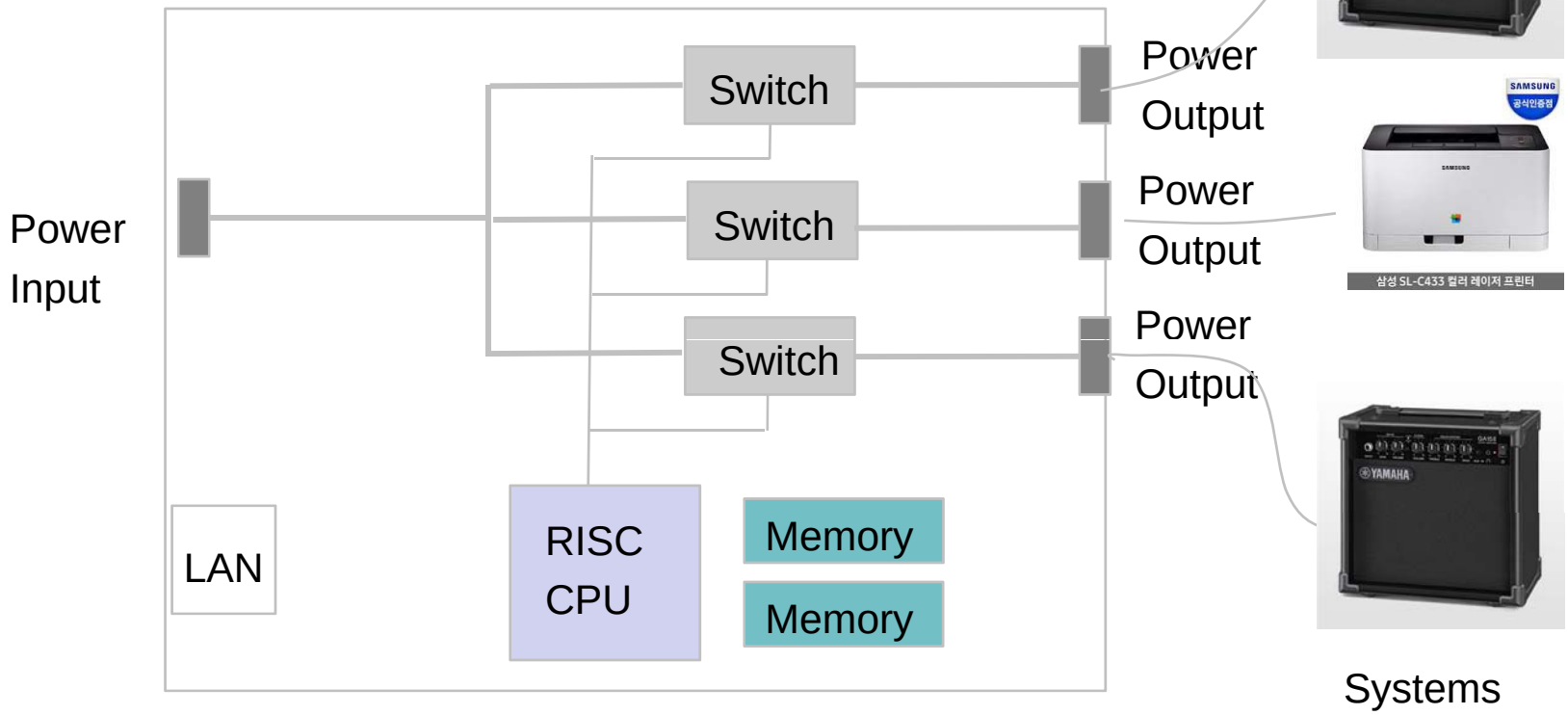

Hardware Specification

AP-PSB2000 IP Power Switching Box for LED Light Power Control

RISC CPU

Front Side

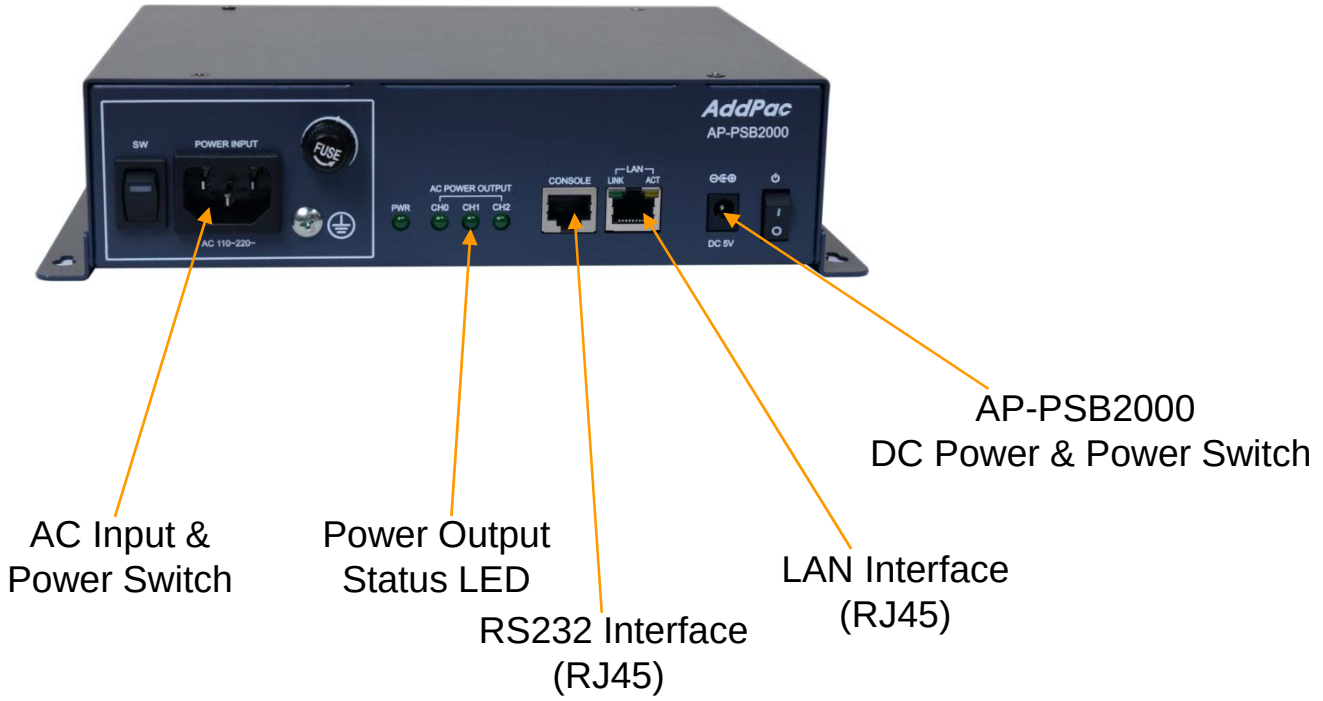

Hardware Specification

AP-PSB2000 IP Power Switching Box for LED Light Power Control

RISC CPU

Rear Side



Power Output

Manual Power ON/OFF
Switch with Status LED

Power Output

Power Output

3’rd Party API Overview

- Support traditional client/server service model
- Use XML over TCP
  - Support flexible argument.
- Support Digest Access Authentication
  - *RFC2609 : An Extension to HTTP: Digest Access Authentication*
- Support port configuration and status
  - *Max slot, max port*
  - *Port on/off status*
- Support remote port control
  - On/Off control
- Support port status notification
  - On/Off status

Thank you!

AddPac Technology Co., Ltd.
Sales and Marketing

Phone +82.2.568.3848 (KOREA)
FAX +82.2.568.3847 (KOREA)
E-mail sales@addpac.com