AP-HDI9N1F

9 CH Full HD IP Video Splitter

High-performance Network DVR Solution

IP Video Splitter vs HD-SDI Video Splitter





AddPac Technology

Sales and Marketing

Contents

- Legacy HD-SDI 9ch Video Splitter
  - CCTV Network Application Diagram
  - Internal Functional Block Diagram
- New Advanced 9ch IP video Splitter AP-HDI9N1F
  - CCTV Network Application Diagram
  - Internal Functional Block Diagram
- Legacy HD-SDI Video Splitter Migration to New AP-HD94N1F
  - Legacy CCTV Management Server
  - AddPac Smart Web Manager
- AP-HD14N1 Hardware Specification



Legacy HD-SDI 9ch Video Splitter

CCTV Network Application Diagram

Full HD IP Camera
(H.264)

Full HD HD-SDI Video Splitter Service Diagram

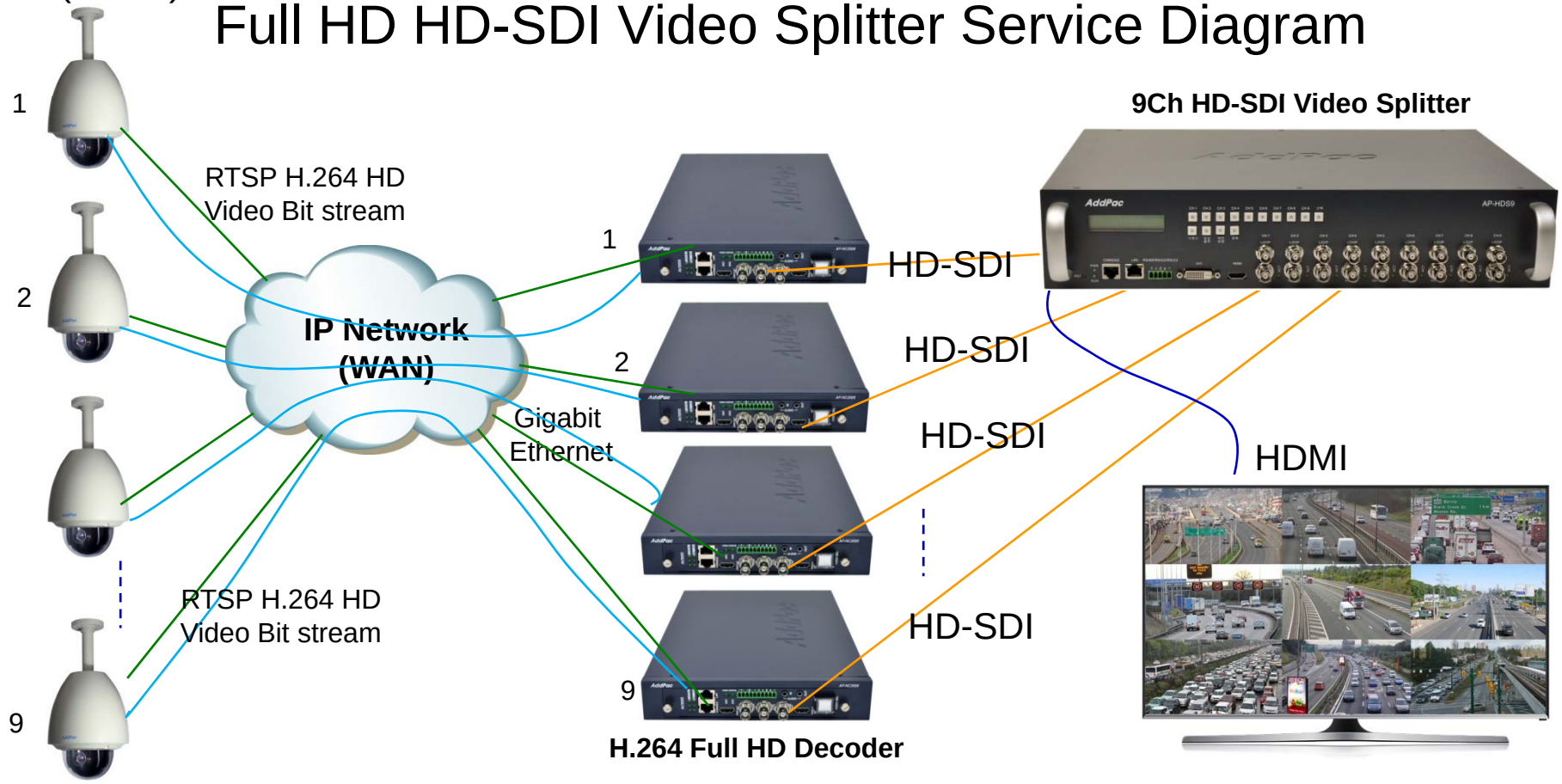

Functional Block Diagram

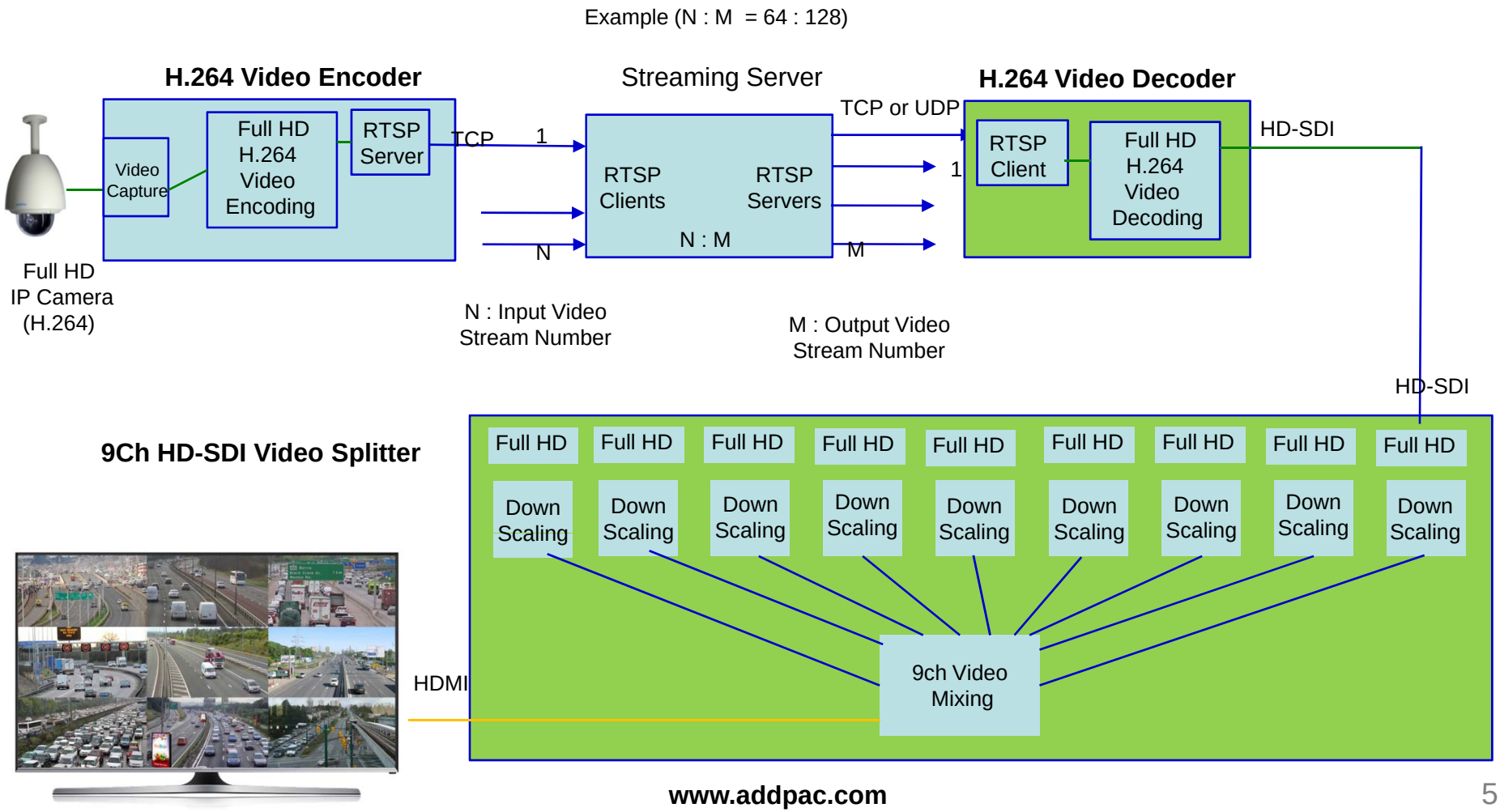

New IP based 9ch Video Splitter

Network Application Diagram

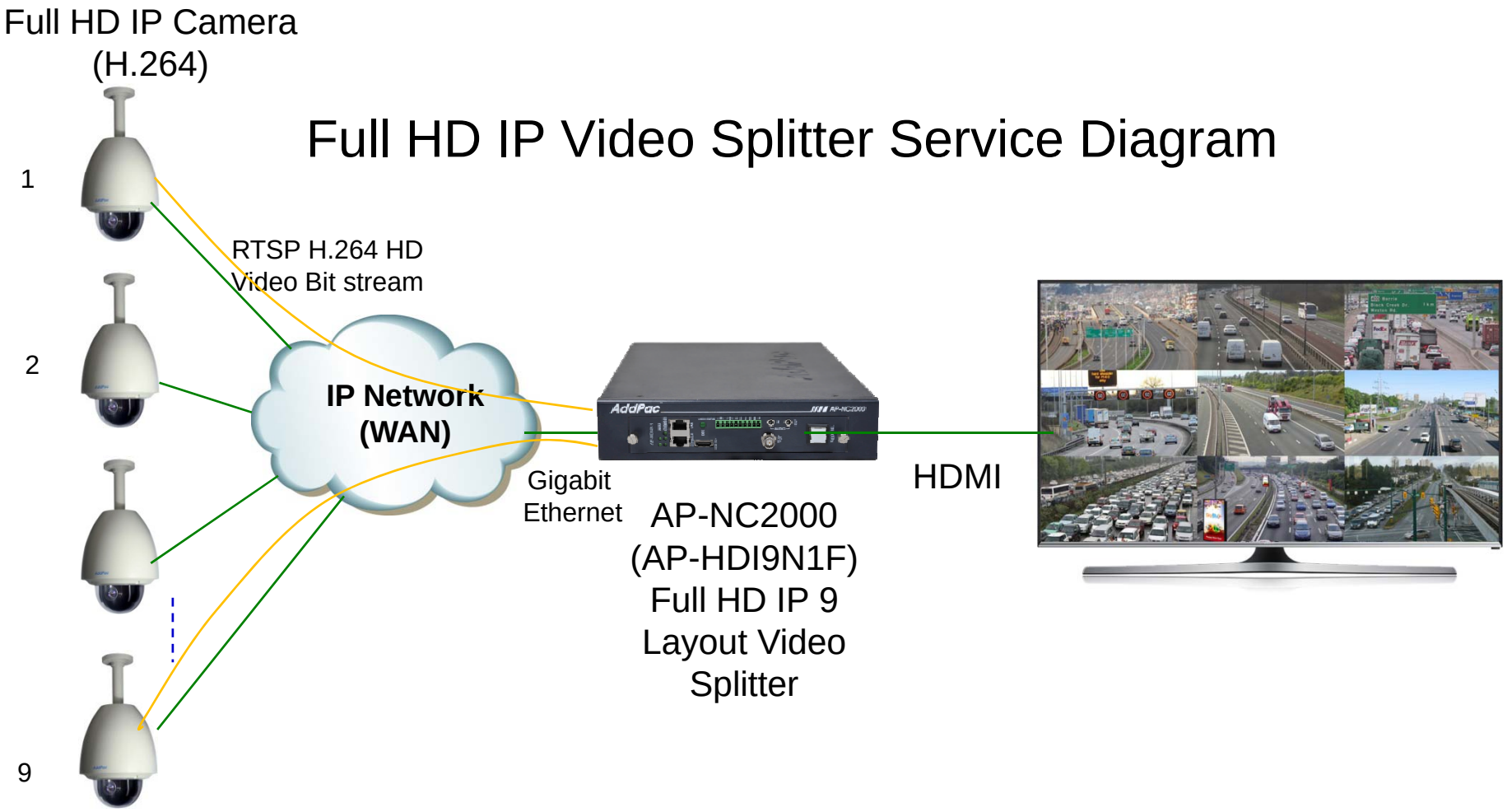

Functional Block Diagram

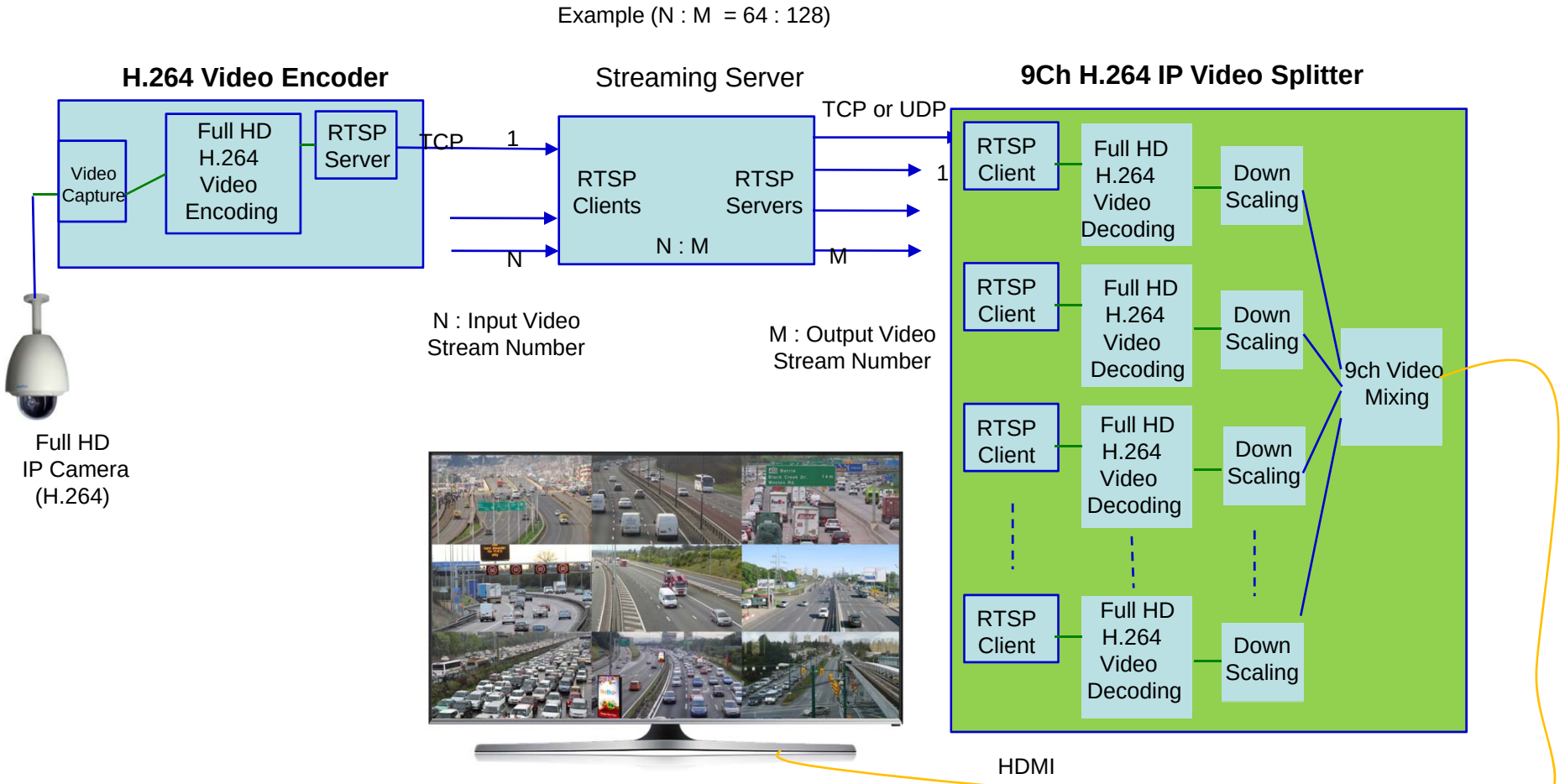

Legacy HD-SDI Video Splitter Easy Migration to New IP based Video Splitter AP-HDI4N1

New IP based 4ch Video Splitter Control Scheme

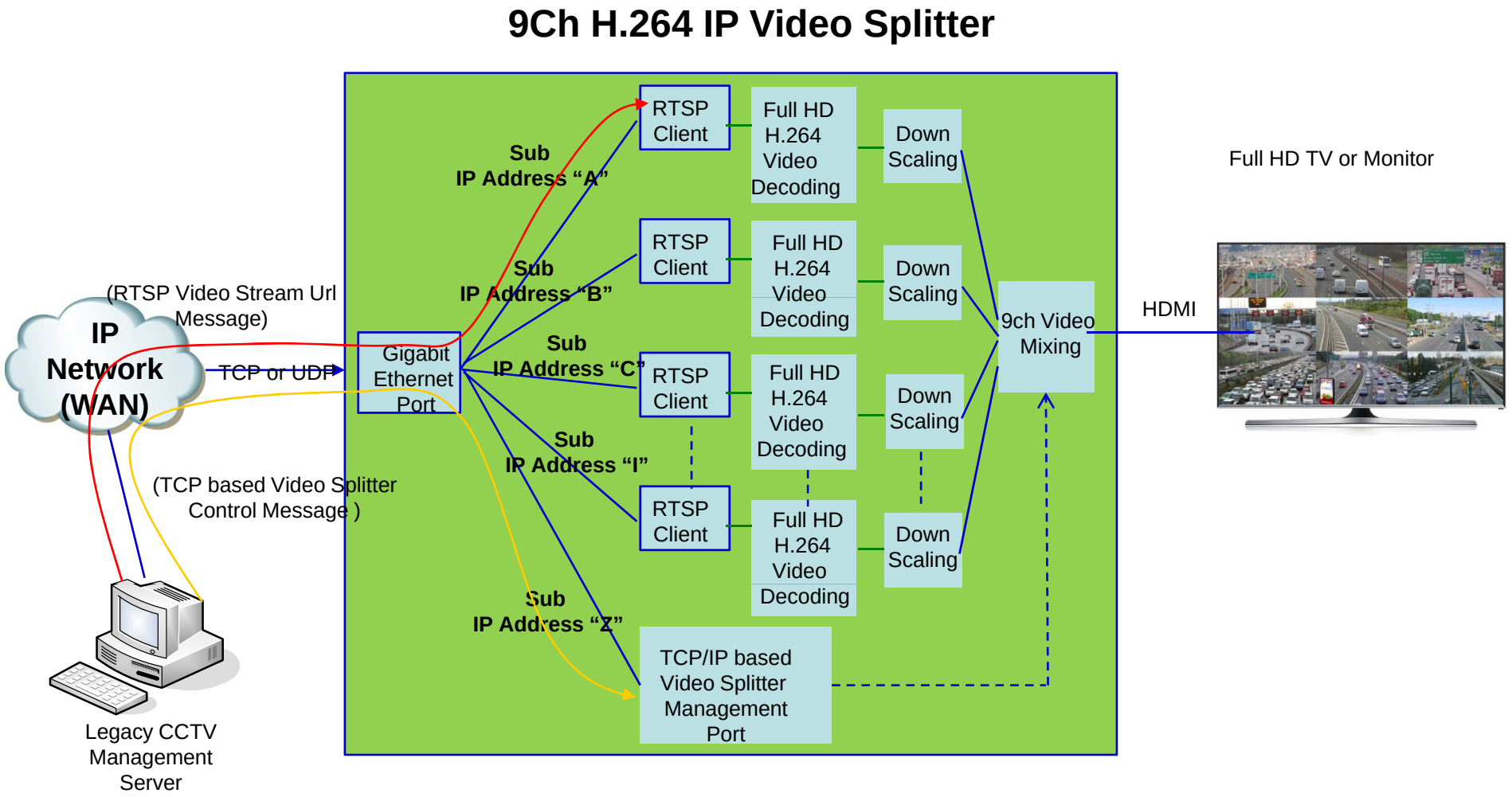

Thank you!

AddPac Technology Co., Ltd.
Sales and Marketing

Phone +82.2.568.3848 (KOREA)
FAX +82.2.568.3847 (KOREA)
E-mail sales@addpac.com