

AP6108 Gigabit LAN-to-LAN Router

Next Generation High Performance LAN-to-LAN Routing Solution

Preliminary Product Overview

(Without notice, following described technical spec. can be changed)



AddPac Technology

Sales and Marketing

www.addpac.com

Contents

- Product Overview
- Product Highlights
- Hardware Specification
- Software Service
- Network Service and Features
- Application Area
- Ordering Information

Product Overview

AP6108 Gigabit LAN-to-LAN Router

- Embedded Hardware System
- High Performance Multicore Processor
- Embedded Linux Operating System for Stability
- Gigabit LAN-to-LAN Routing
- Static, RIPv1/v2, OSPF v2 Routing
- Support Various Network Protocols
- Uplink : One(1) Gigabit Ethernet, Downlink : Octal(8) Gigabit Ethernet
- Powerful Management and User Friendly Features
- CLI Interface for Detailed Control
- Smart Web Management
- Firmware Upgradeable Architecture

Product Highlights

AP6108 Gigabit LAN-to-LAN Router

High Performance
Gigabit LAN-to-LAN Router

Downlink : Octal(8) 10/100/1000Mbps Gigabit Ethernet

Uplink : One(1) 10/100/1000Mbps Gigabit Ethernet

RACK Mount Style

RS232C Console for Command Line Interface



Various QoS Algorithm

Static, RIP v1/v2, OSPF v2, etc Routing Algorithm

APOS™Technology
Network Protocol

Firmware Upgradeable Architecture

IP based Network Protocol & Traffic Monitoring

Smart Web Management

Embedded Hardware System

Hardware Specification

AP6108 Gigabit LAN-to-LAN Router

- High-End Multicore Microprocessor Computing Power
- Main Chassis
  - Network Interface
    - Uplink : One(1) x 10/100/1000Mbps Gigabit Ethernet
    - Downlink : Octal(8) x 10/100/1000Mbps Gigabit Ethernet
    - One(1) RS-232C Console (RJ45)
  - Uplink Network Utilization Monitoring Display

Hardware Specification

AP6108 Gigabit LAN-to-LAN Router

Front Side

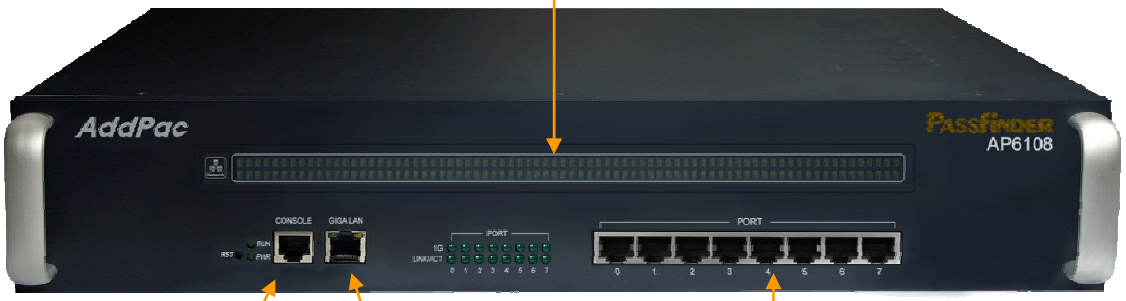

Back Side



Software Service

AP6108 Gigabit LAN-to-LAN Router

- Built-in AddPac APOS Internetworking Software
  - LAN-to-LAN QoS Routing Features
  - WAN Interface Features
- Firmware Upgradeable Architecture
- Industry Standard Network Protocol Features
- Highly User Friendly Management Features
  - Smart Web Manager

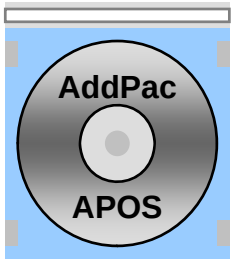



Network Service and Features (Cont..)

AP6108 Gigabit LAN-to-LAN Router

- Basic Routing Function
  - IPv4/IPv6 Dual Stack
  - Management
    - Telnet, FTP, TFTP, SSH, SNMP, Syslog support
    - Packet filtering (Access-list)
  - Routing
    - Static, RIP, RIPng, OSPFv2/v3, BGP4
- QoS Routing Support.
  - Source Address based routing
  - DSCP based Routing
  - Service Class based routing

Network Service and Features (Cont..)

AP6108 Gigabit LAN-to-LAN Router

- Network Managements
  - Cisco CLI based.
    - access-list, class-map, policy-map, service-policy
  - SNMP Support
    - Support same QoS functions with Cisco CLI
  - Embedded HTTP Server
  - Classify and Control
    - Cisco class-map and policy-map Based
    - Automatic
  - Traffic Monitoring and Report
    - Utilization, Top Users and Application, Traffic History
    - Active Flows
  - Event Notification
    - SNMP Trap, E-mail, Syslog

Network Service and Features

AP6108 Gigabit LAN-to-LAN Router

- Security Functions
  - Standard & Extended IP Access List
  - Enable/Disable for Specific Network Protocols
  - Multi-level User Account Management
  - Auto-disconnect for Telnet/Console Sessions
  - PPP User Authentication Supports (PAP & CHAP)
- Operation & Managements
  - System Performance Analysis for Process, CPU, Connection Interface
  - Debugging, System Auditing, and Diagnostics Support
  - System Booting and Auto-rebooting with Watchdog Feature
  - System Managements with Data Logging
  - IP Traffic Statistics with Accounting

Application Diagram

AP6108 Gigabit LAN-to-LAN Router

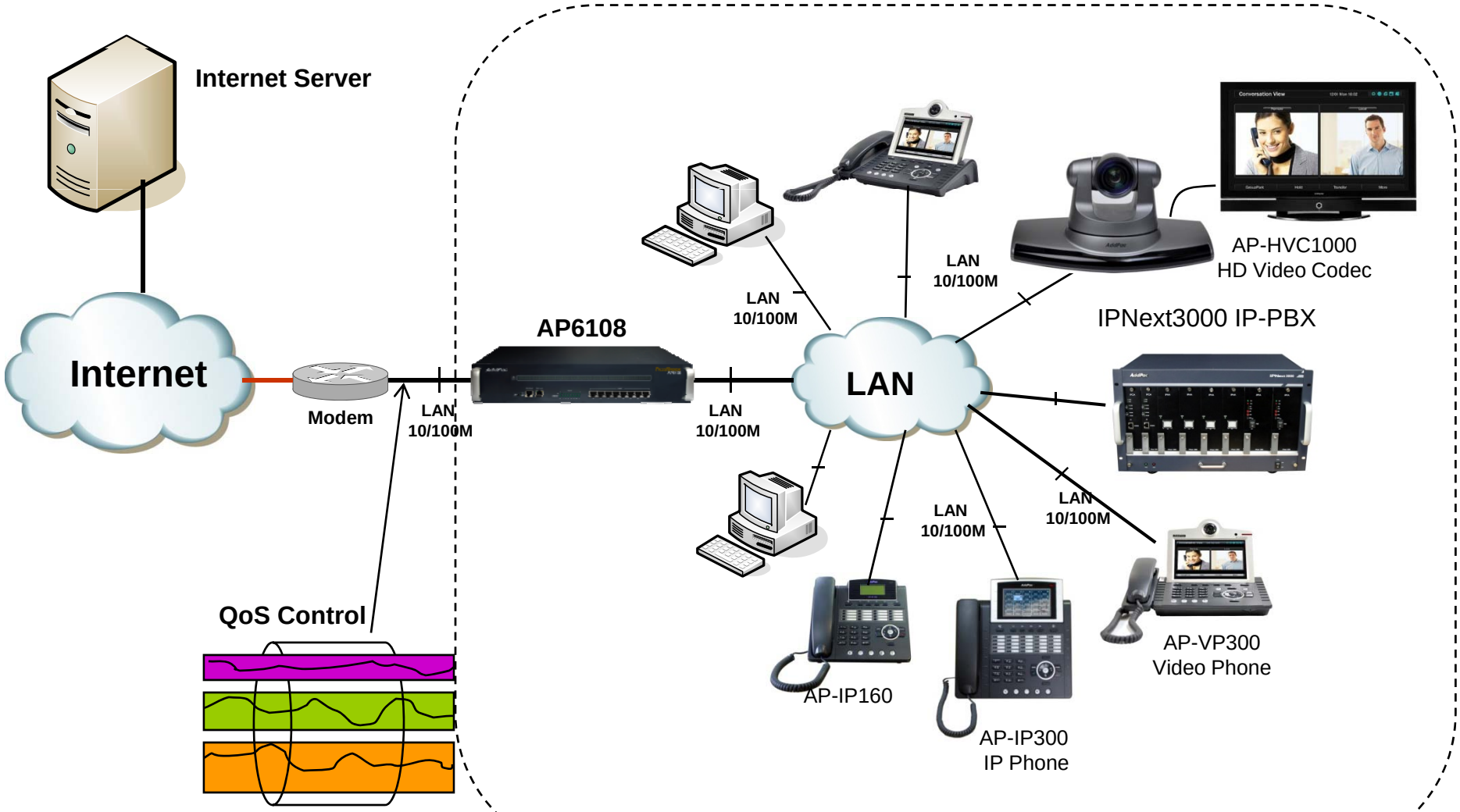

Ordering Information

- AP6108 Gigabit LAN-to-LAN Router
  - AP6108 19Inch Rack Mountable Chassis
  - High-performance Multicore Processor
  - 1-Port 10/100/1000Mbps Gigabit Ethernet : Uplink
  - 8-Port 10/100/1000Mbps Gigabit Ethernet : Downlink
  - 1-port RS-232C Console
  - Internal Power Supply : Free Voltage (110v~220v)
  - Including Network Cable Set & Power Supply Cable, etc.
- Built-in APOS Internetworking Software for AP6108
- Including 1 Year Hardware Warranty
- Product Documents
  - Install and Operation Guide (PDF)
- Pricing
  - AddPac Technology Regional Sales Manager
  - Authorized Sales and Marketing Representatives
  - Please Contact www.addpac.com

Thank you!

AddPac Technology Co., Ltd.
Sales and Marketing

Phone +82.2.568.3848 (KOREA)
FAX +82.2.568.3847 (KOREA)
E-mail:sales@addpac.com