

AP1800
8 Port E&M VoIP Gateway

High Performance E&M VoIP Gateway Solution







Product Overview

AddPac Technology

Sales and Marketing

www.addpac.com

Contents

- Product Overview
- Hardware Specification
- APOS Technology
- VoIP (Voice over IP) service
- Advanced QoS Features
- Network Protocols
- Network Management
- Security Management
- Application Service
- E&M VoIP Module
- Ordering Information



Product Overview

AP1800 E&M VoIP Gateway

- H.323/SIP Dual Concurrent Stack Embedded
- High Performance RISC & Programmable DSP Architecture
- 8 Port Analog VoIP Gateway Solution
- Various Analog Interface Support : FXS, FXO, E&M
- Two(2) 10/100Mbps Fast Ethernet (IP Share ,etc)
- High Performance LAN-to-LAN Routing Capability
- G.711/G.726/G.723/G.729, T.38 Fax , VAD, etc
- Powerful Network Protocols (PPPoE, DHCP, Static Routing, etc)
- Firmware Upgradeable Architecture
- SNMS (Smart Network Management System) for Large Scale Deployment
- Advanced Voice QoS Mechanism
- Light and Compact Design with Internal Power Supply
- Two(2) VoIP Module Slot
- Hot-Swap Function Support

Product Highlights

AP1800 E&M VoIP Gateway

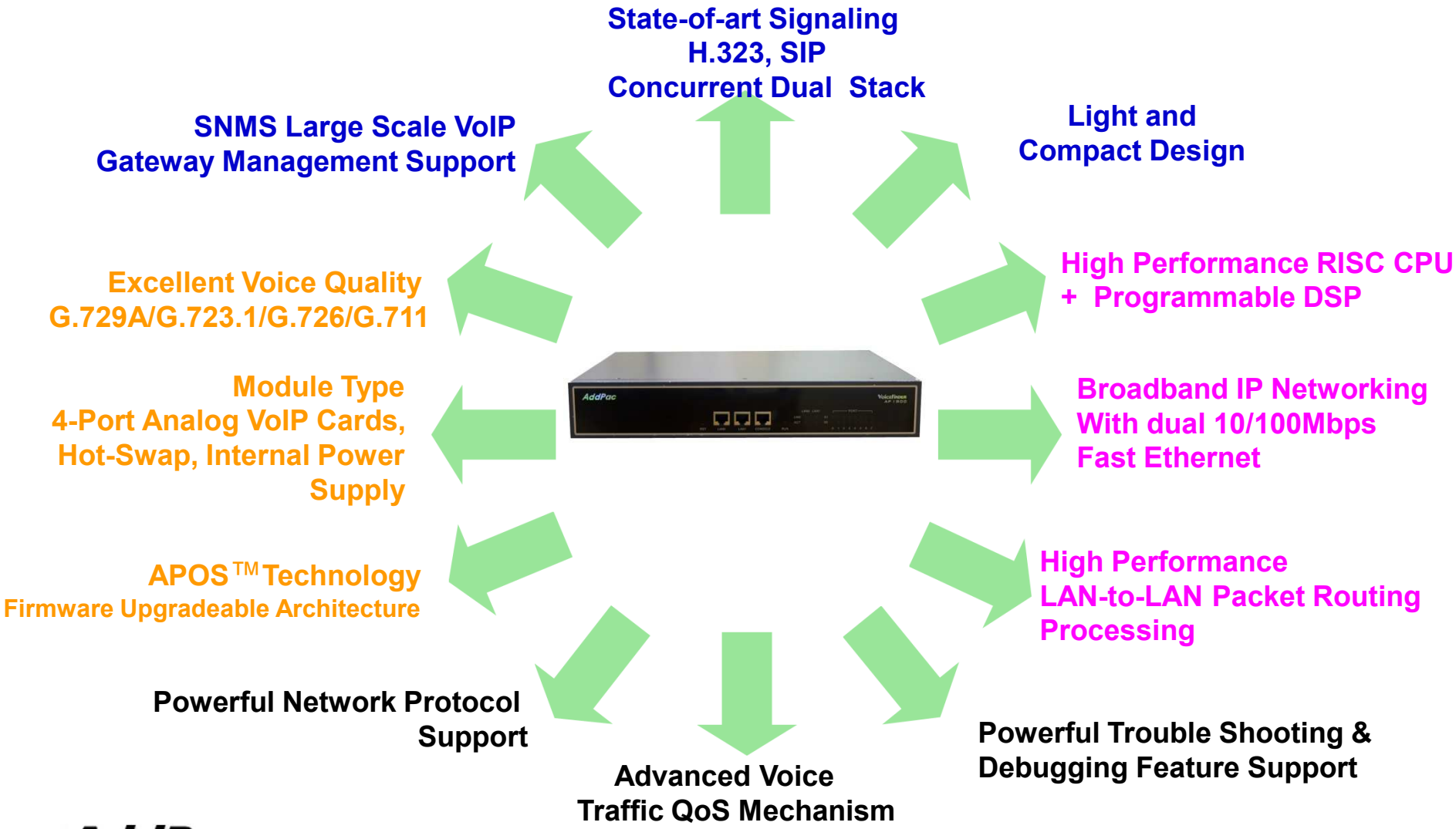

APOS Technology

AP1800 E&M VoIP Gateway

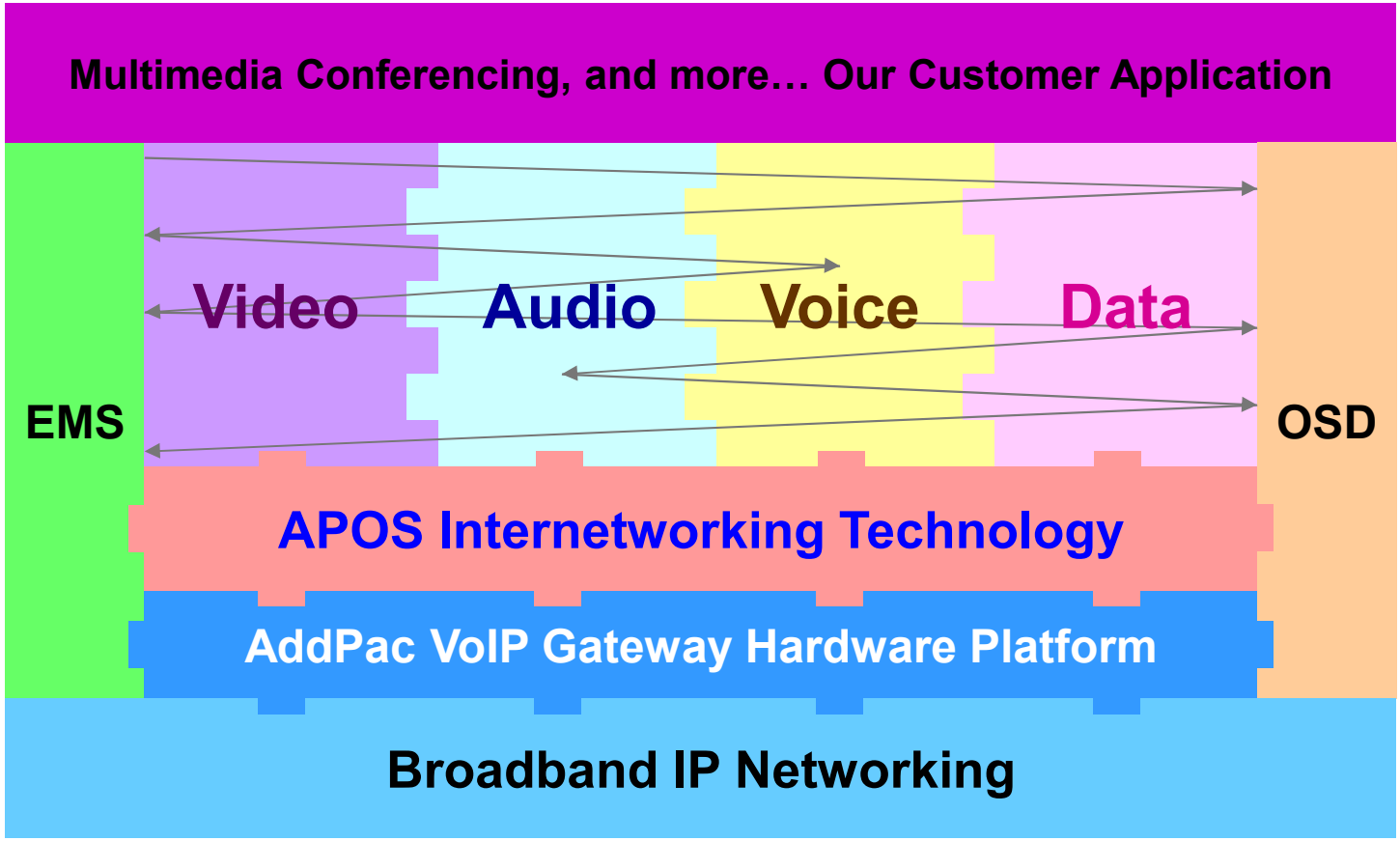

- APOS : AddPac Internetworking Operating System
- OSD : On- Screen Display
- EMS : Element Management System

Hardware Specification

AP1800 E&M VoIP Gateway

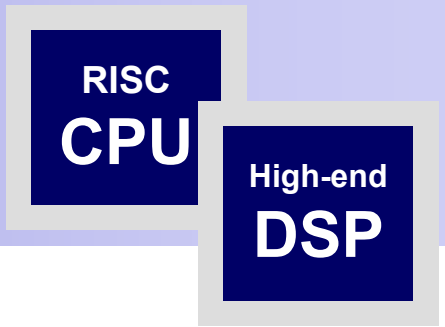

- **RISC Microprocessor Computing Power**
- **Up to 8 Port Analog VoIP Gateway**
- **Two(2) VoIP Module Slots (Hot-Swap)**

  - 4 Port E&M Card , 8 Port FXS Card, 8 Port FXO Card
  4 Port E&M Card
- **Network Interface**

  -Two(2) 10/100Mbps Fast Ethernet (RJ45)
- **RS232C Console Interface**
- **Run LED, LAN LED, Port LEDs**
- **Internal Power Supply**

Hardware Specification

AP1800 E&M VoIP Gateway

Hardware Specifications

AP1800 VoIP Series	Basic Specifications
Voice Interface	Two(2) VoIP Module Slots
	AP-N1-E&M4, AP-N1-FXS8, AP-N1-FXO8, etc
Ethernet Interface	2-Ports 10/100Mbps Ethernet Interface(RJ-45)
Flash Memory	4Mbyte High-speed Flash Memory
Base Memory	32 Mbyte High-speed SDRAM
Power Requirement	Power Supply Adaptor / VAC 110~220V, 50/60Hz,
Operating Temperature	0ºC ~ 45ºC (32 ºF ~ 122ºF)
Storage Temperature	-40ºC ~ 85ºC (-40ºC ~ 185ºF)
Relative Humidity	5% ~ 95% (Non-condensing)

Network interface Configurations



Hardware Specification

AP1800 Analog VoIP Gateway



AP-N1-E&M4
(4-Port E&M Module)

Hardware Specification

AP1800 Analog VoIP Gateway



AP-N1-E&M4
(4-Port E&M Module)

(8-Port E&M)

VoIP (Voice over IP) Service

AP1800 Analog VoIP Gateway

- **H.323, SIP Dual Stack**
- **H.323**
  - **ITU-T Standard H.323 v3 Support**
  - **Support H.245 Tunneling**
  - **Including H.235 Security Features**
- **SIP**
  - **IETF RFC3261 or RFC2543 SIP Standard**

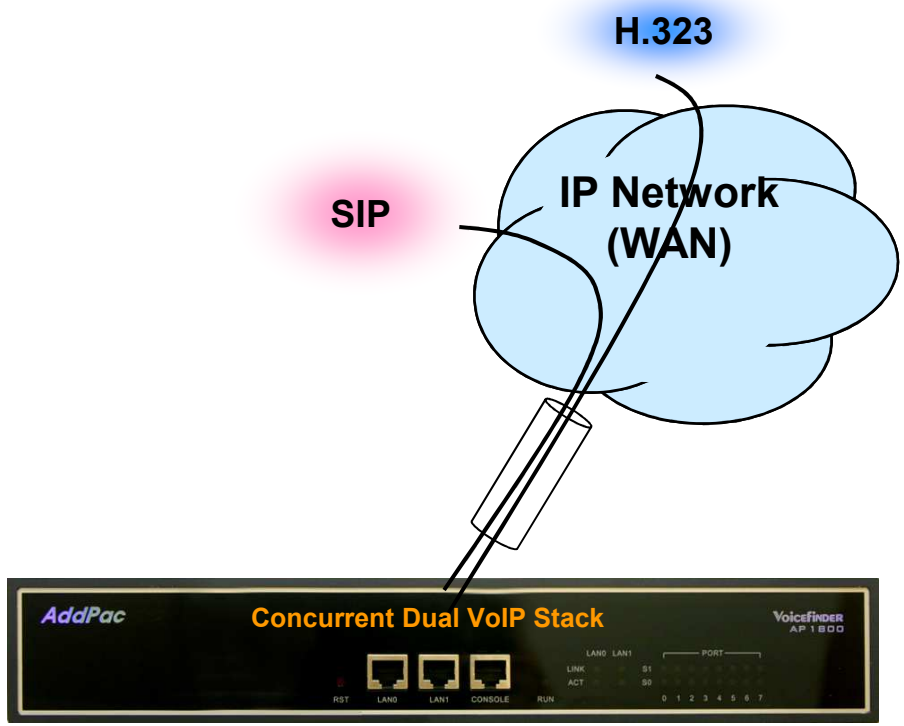

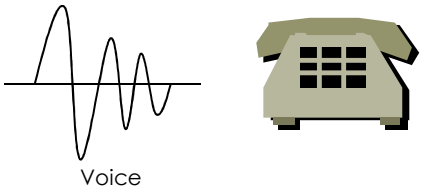

VoIP (Voice over IP) Service

AP1800 Analog VoIP Gateway

- **H.323**
  - Fast connect, normal connect support
  - H.245 tunneling support
  - Q.931 response message setting for inbound VoIP calls
  - H.245 logical channel open timing selection function
  - Start H.245 procedure support
  - DTMF / Hook flash relay with H.245 alphanumeric / signal
  - Secondary gatekeeper support
  - Gatekeeper assignment according to the domain name
  - Gatekeeper discovery with multicast
  - Lightweight RRQ support
  - Signaling TCP port assignment
  - Resource threshold setting with RAI
  - H.235 clear-token, crypto-token support
  - canMapAlias support
  - Technical prefix (supported prefix) support
  - Public IP assignment in NAT environment

- **SIP**
  - Gateway-based / Endpoint-based registration support
  - Secondary proxy-server assignment function
  - SIP signaling port change function
  - SIP proxy server assignment according to the domain name
  - T.38 real-time fax relay support
  - DTMF relay support with RFC2833 / OPTION message
  - Re-INVITE support



VoIP (Voice over IP) Service

AP1800 Analog VoIP Gateway

- **Voice Codec**
  - G.711 A-Law, G.711 U-Law
  - G.726 r16, G.726 r32
  - G.729A
  - G.723.1 r63, G.723.1 r53
  - VAD (Voice Activity Detection) function support
  - DTMF relay support (H.323, SIP, MGCP common) based on RFC2833
- **RTP**
  - Redundant RTP packet transmission in case of severe packet loss
  - Dynamic jitter buffer management and RPT packet jitter and loss compensation with heuristic & DSP error concealment
  - Static jitter buffer setting support
  - Voice frame per RTP packet number control for each codec
  - In-band ring-back tone support
  - Virtual ring-back tone support
  - Tone parameter change support

- **FAX**
  - Fax relay mode supporting T.38, inband-T.38, bypass mode
  - Lost packet compensation with redundant setting in case of T.38 fax relay
  - Fax relay mode, rate setting for remote end

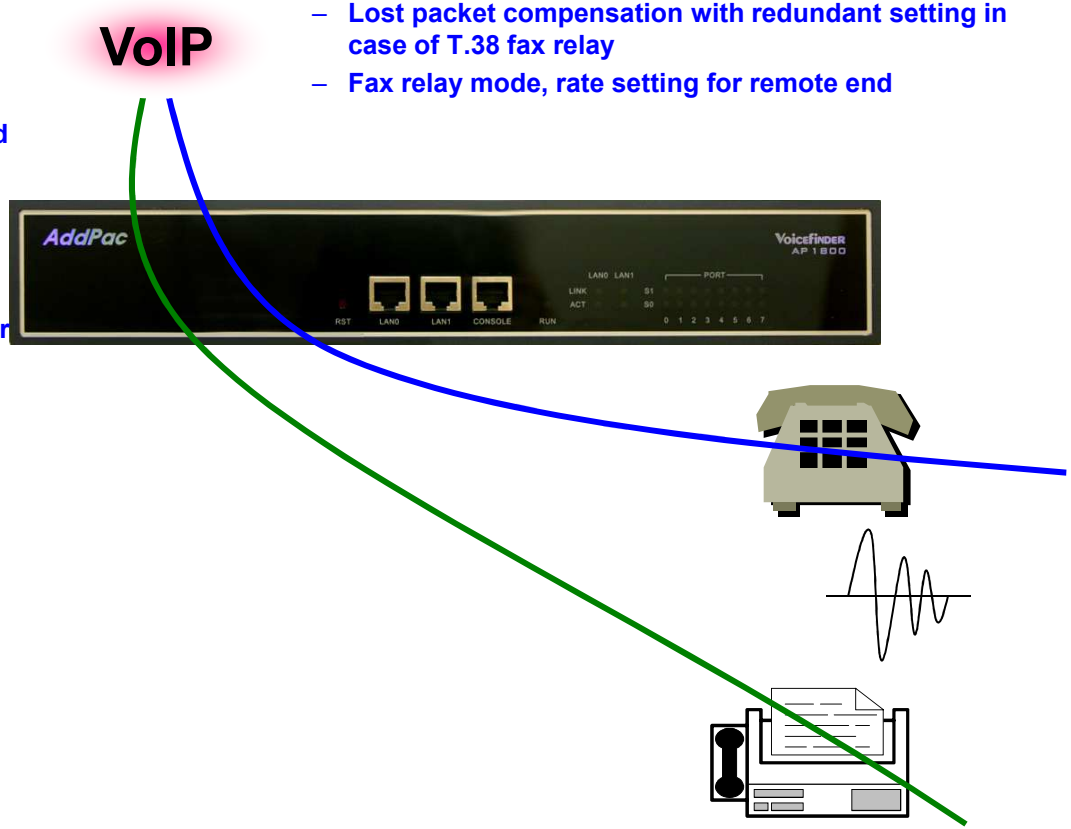

VoIP (Voice over IP) Service

AP1800 Analog VoIP Gateway

- **VoIP Call Controls**
  - Hot line connection function with PLAR (Private Line Auto Ring Down)
  - Leased line emulation function
  - Connection monitoring function
  - Fault tolerant with Redundancy and Call Distribution among Gateways for load balancing
  - Call attempt with IP address
  - H.323, SIP, MGCP inbound call connection for each voice port
  - Multiple E.164 setting for one voice port
  - One E.164 or digit pattern can be assigned to more than one voice port
  - Hunting with Longest match/ priority/ sequence/ random
  - One stage call setup by Digit forwarding
  - Call barring with specific digit patterns
  - Calling and called number conversion for PSTN outbound calls
  - PSTN rerouting in case of VoIP call attempt failure

- **VoIP Call Controls (cont.)**
  - Call transfer for internal calls
  - Call pickup for internal calls
  - Calling and called number conversion for VoIP outbound calls
  - Calling and called number conversion for VoIP inbound calls
  - Fax broadcasting call control

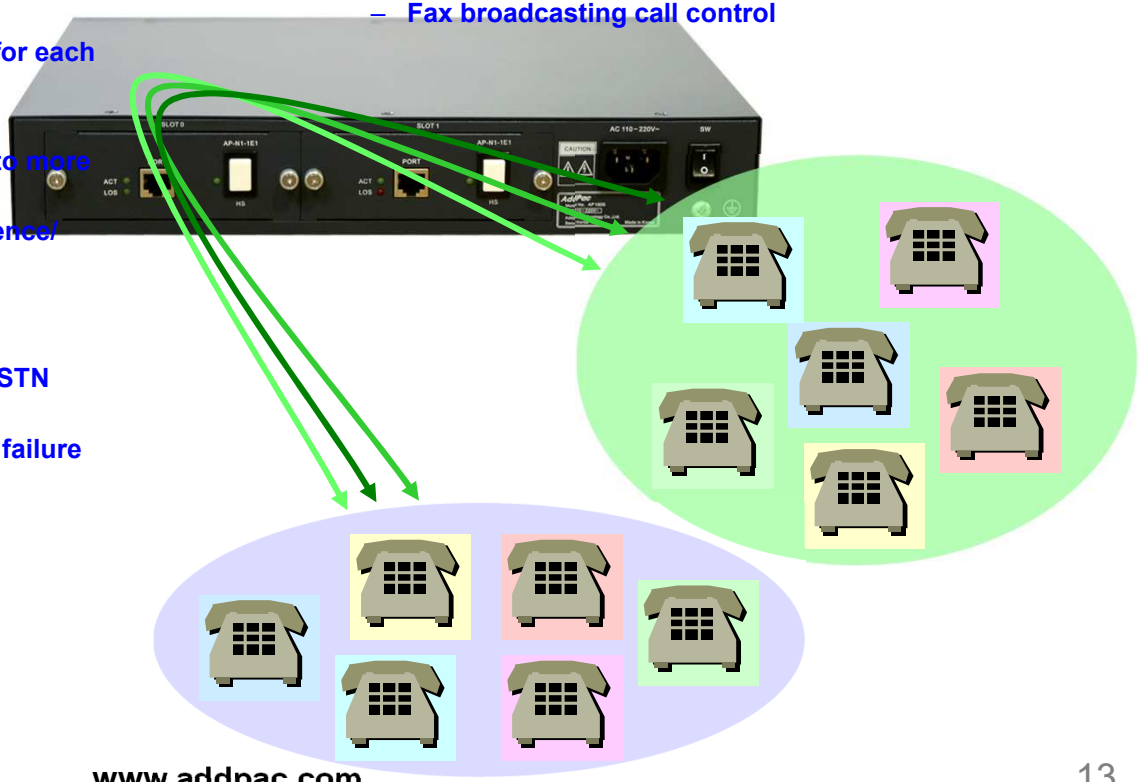

Advanced QoS Features

AP1800 Analog VoIP Gateway

- **Enhances Transmit Voice QoS Features**
  - Voice Traffic Priority Queuing
  - QoS Service Profiling
  - Providing Virtual Network Transmit Algorithm
  - Real-time Voice Traffic QoS Support
  - RTP Packet Transmit Interval Control
  - Supporting RTP Packet Redundancy Scheme
  - IP Header Control such as ToS, Diffserv
- **Enhances Receive Voice QoS Features**
  - Dynamic Jitter Buffer Management
  - Error Concealment
  - Support T.38 FAX Data Error Recovery Scheme

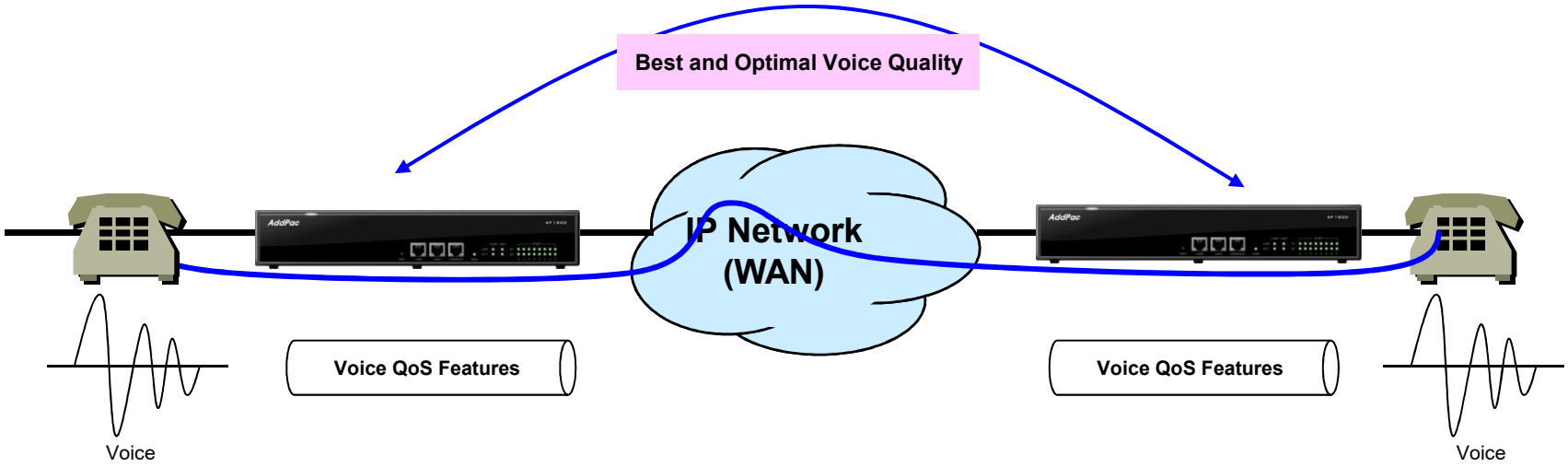

Network Protocols

AP1800 Analog VoIP Gateway

Basic Network Protocols
- ARP, IPv4, TCP, UDP, ICMP, SCTP, IGMP, MLD

Routing Protocol
- IPv4 : Static

Service Protocol
- FTP, Telnet, TFTP, DHCP Server/Relay, SNMP Server
- CDP (Cisco Discovery Protocol)
- DNS Resolver , DDNS(nsupdate)
- Bridge
- Syslog

IPv4 Address Configuration
- Fixed (Static)
- DHCP
- PPPoE

Miscellaneous
-Cisco Style CLI
- Standard & Extended IPv4 Access List
- Multi-level User Account Management
- IP accounting
- STUN Client

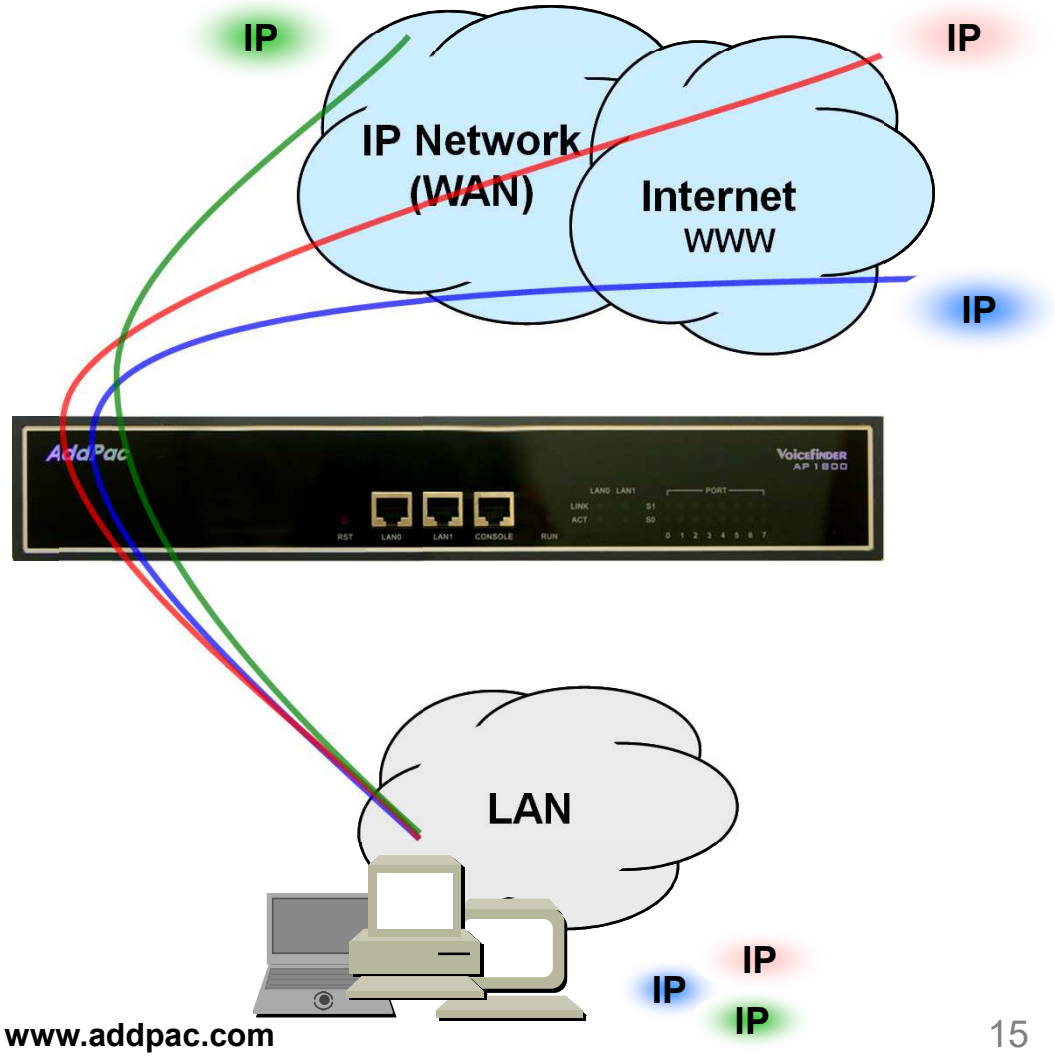

Network Management

AP1800 Analog VoIP Gateway

- **SNMP**
  - Standard Simple Network Management Protocol(SNMP) Agent support
  - MIB v1 and v2 Support
- **Web-based Management**
  - Smart Easy Setup
  - Standard Voice Interface
  - Standard PSTN Back-up Interface
- **Watch-dog Function**
  - Hardware, Software watch-dog services
- **Remote Management**
  - Telnet
  - Rlogin
- **Auto Upgrade Service**
  - HTTP server based APOS image and configuration file auto-upgrade support
- **Batch Job Function**
  - Text based script downloading

- **Interoperable with AP-VPMS Service**
  - AddPac VoIP Plug & Play Management System (AP-VPMS)

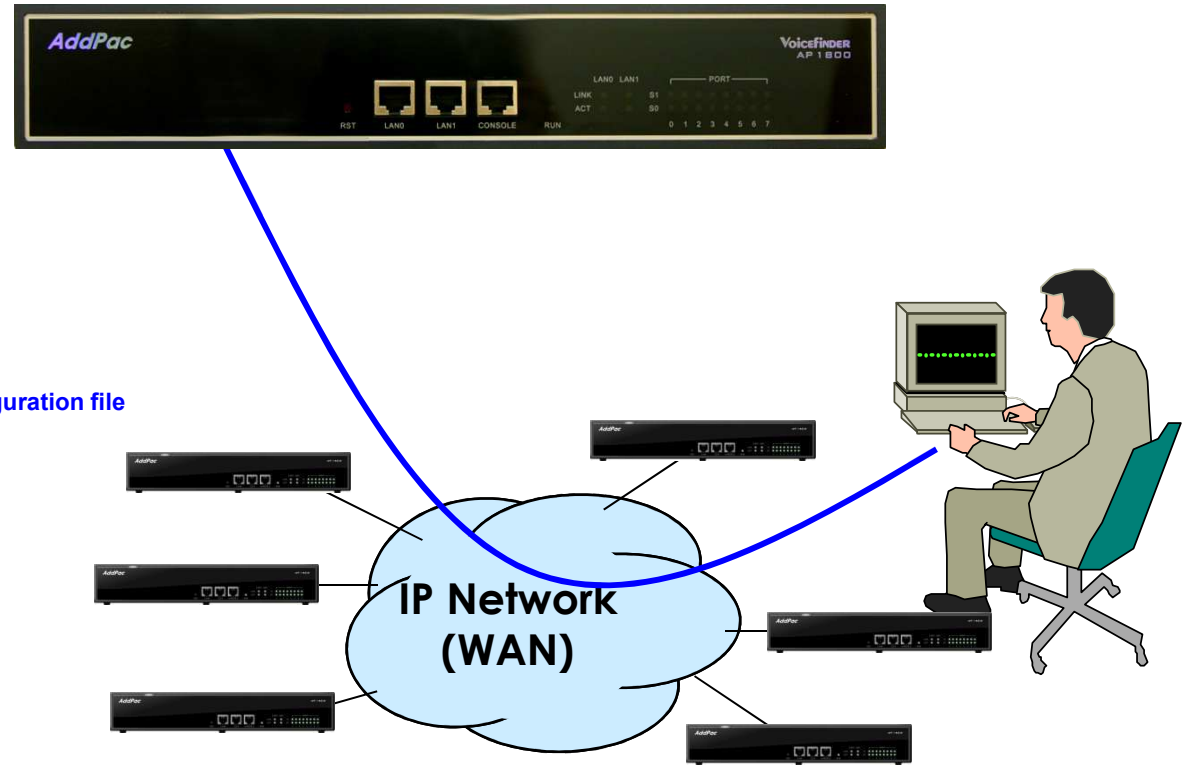

Security Management

AP1800 Analog VoIP Gateway

- IP packet filtering
- IP access list
- User authentication function
  - Password Authentication Protocol (PAP)
  - Challenge Handshake Authentication Protocol (CHAP)
- Enable/Disable specific protocols
- Auto-square connect of Telnet session
- Account Management function for multi-level user
- SNMP/TELNET/FTP/HTTP/TFTP port assignment function
- SNMP/TELNET/FTP access list management
- Boot mode security checking function

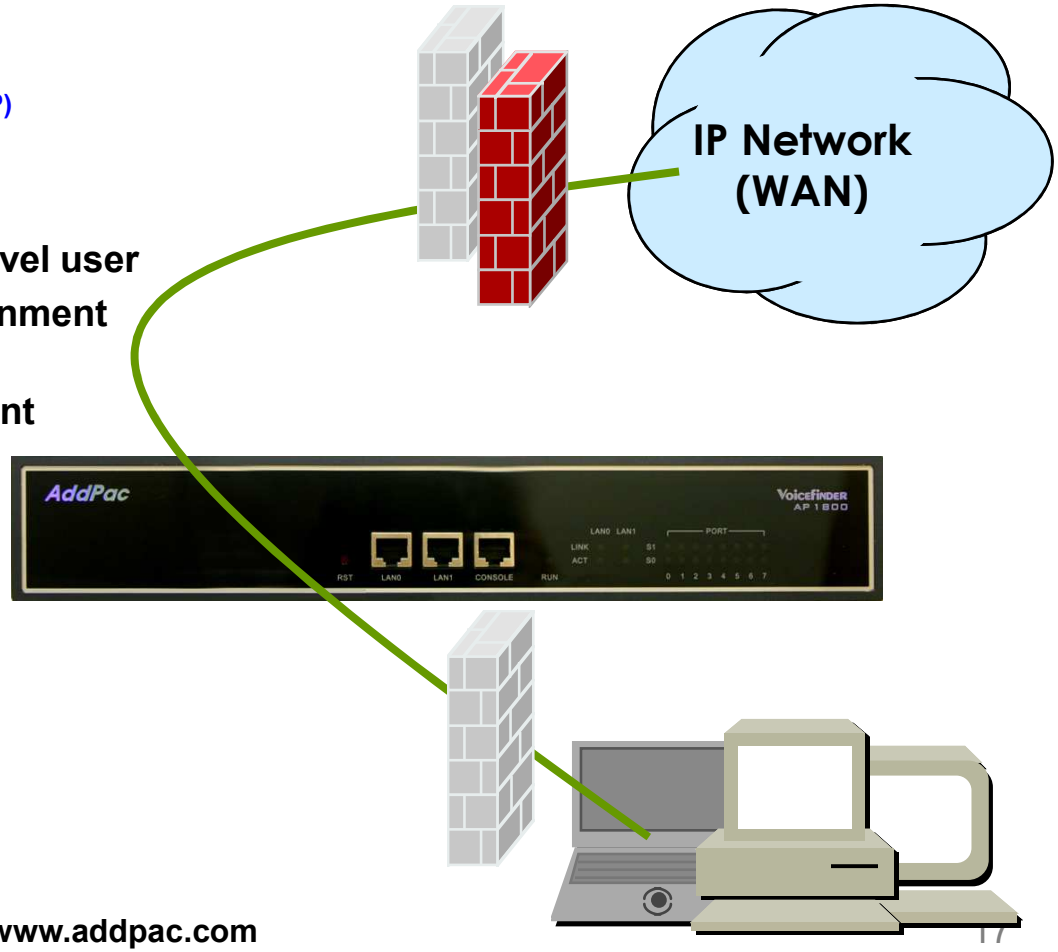

Standard Application

AP1800 Analog VoIP Gateway

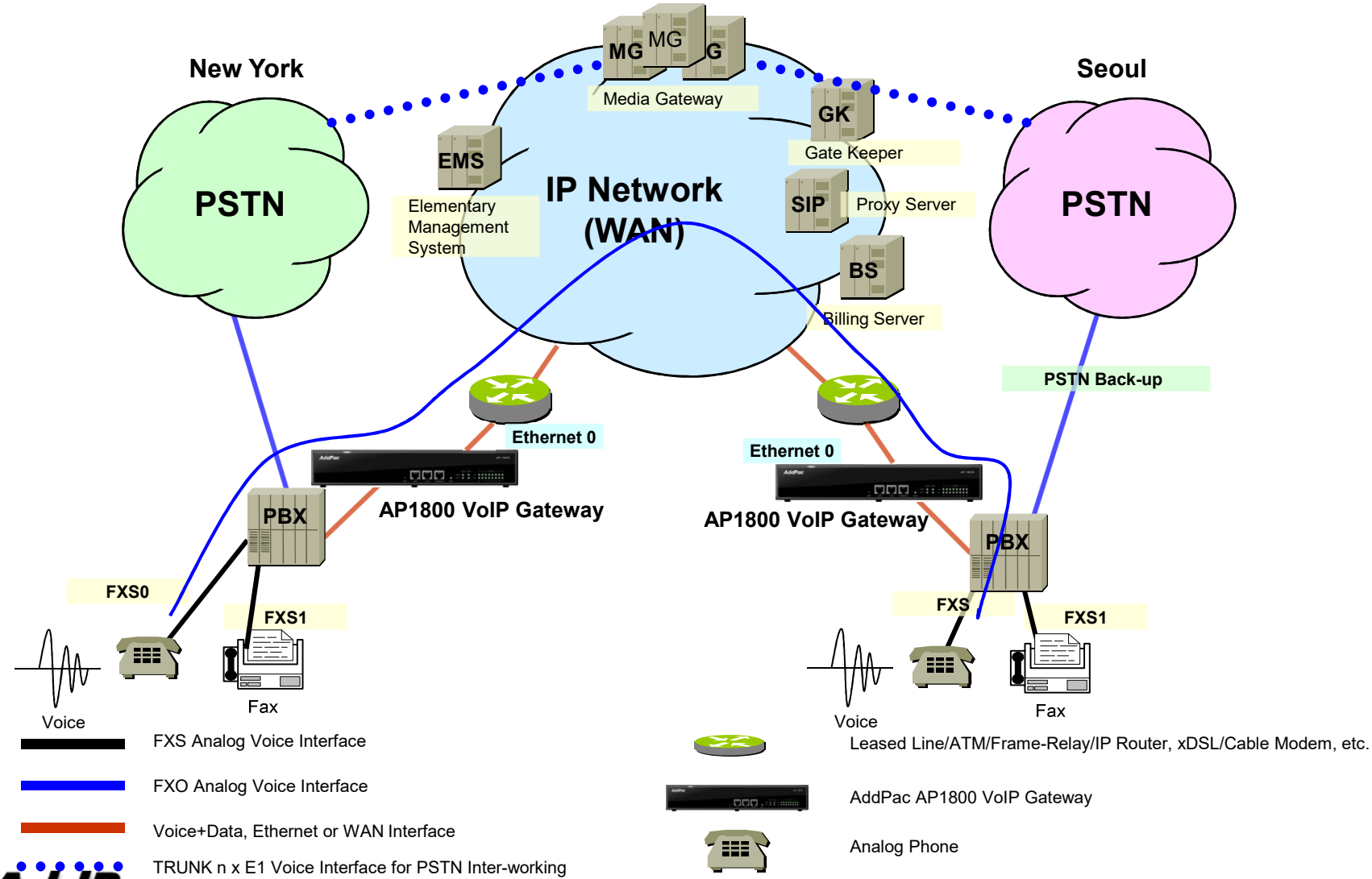

4-Port E&M Module for N1 Platform



Contents

- Hardware Specification
- 2-Wire E&M Model Pin Assignment
- 4-Wire E&M Model Pin Assignment
- E&M Type I Interface
- E&M Type II Interface
- E&M Type III Interface
- E&M Type IV Interface
- E&M Type Selection(Jumper Selection)
  - E&M 2-Wire Mode
  - E&M 4-Wire Mode

Hardware Specification

High-end DSP

Hardware Module Specification

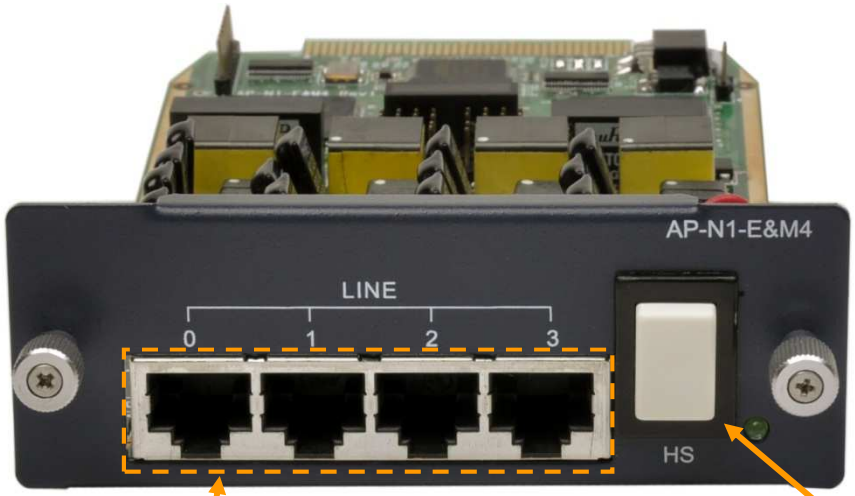

4-Port E&M Interface (4 x RJ45)

Hot-Swap Push Button

E&M 2 Wire Model

RJ45 Pin Assignment

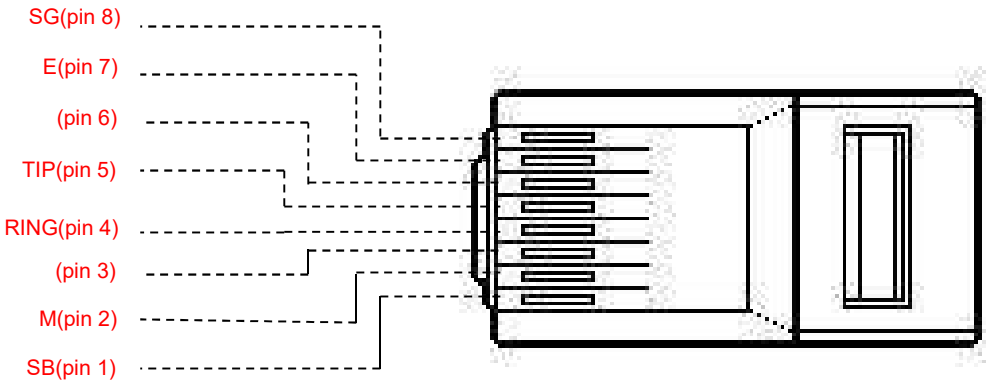

E (Ear or Earth) - Signal wire from trunking (CO) side to signaling side.
M (Mouth or Magnet) - Signal wire from signaling side to trunking (CO) side.
SG (Signal Ground) - Used on E&M Types II, III, IV (Type IV is not supported on AddPac IP-PBX/gateways).
SB (Signal Battery) - Used on E&M Types II, III, IV (Type IV is not supported on AddPac IP-PBX/gateways)
T / R (Tip/Ring) - T / R leads carry audio between the signaling unit and the trunking circuit. On a 2-wire audio operation circuit, this pair carries the full-duplex audio path.
T1/R1 (Tip-1/Ring-1) - Used on 4-wire audio operation circuits only. The 4-wire implementation provides separate paths for receiving and sending audio signals.

E&M 4 Wire Model

RJ45 Pin Assignment

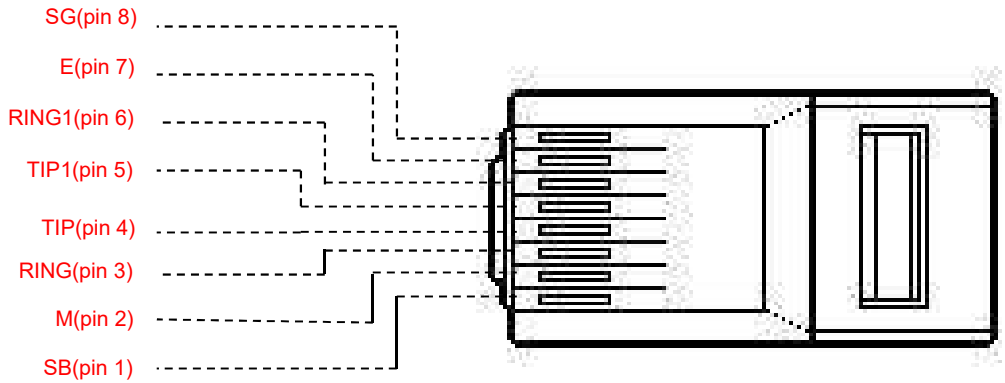

E (Ear or Earth) - Signal wire from trunking (CO) side to signaling side.
M (Mouth or Magnet) - Signal wire from signaling side to trunking (CO) side.
SG (Signal Ground) - Used on E&M Types II, III, IV (Type IV is not supported on AddPac IP-PBX/gateways).
SB (Signal Battery) - Used on E&M Types II, III, IV (Type IV is not supported on AddPac IP-PBX/gateways)
T / R (Tip/Ring) - T / R leads carry audio between the signaling unit and the trunking circuit. On a 2-wire audio operation circuit, this pair carries the full-duplex audio path.
T1/R1 (Tip-1/Ring-1) - Used on 4-wire audio operation circuits only. The 4-wire implementation provides separate paths for receiving and sending audio signals.

E&M Type I Interface

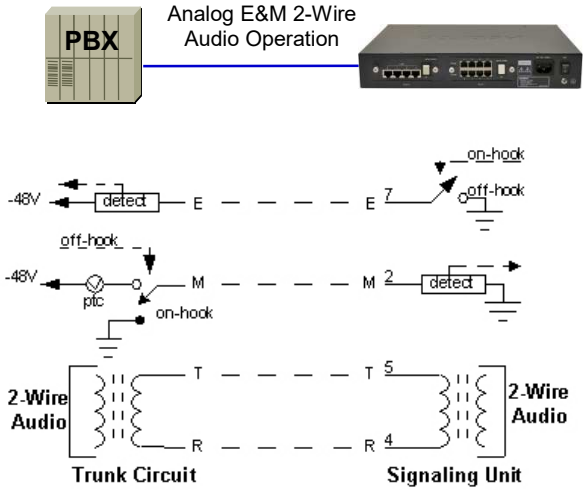

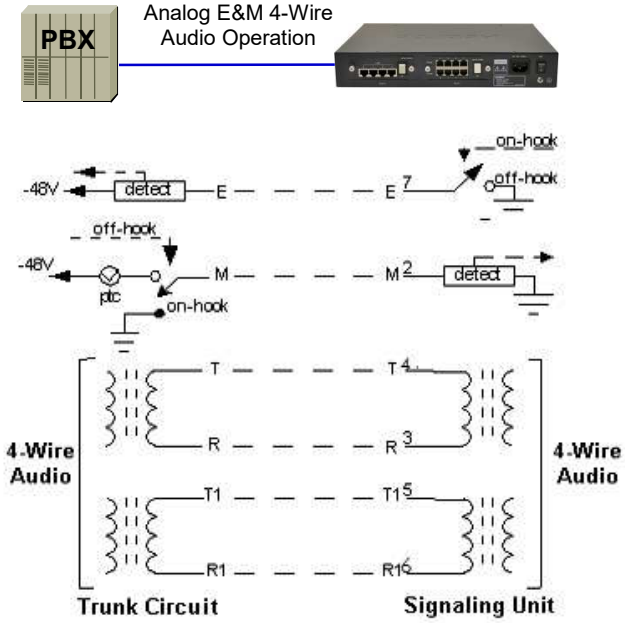

E&M Type II Interface

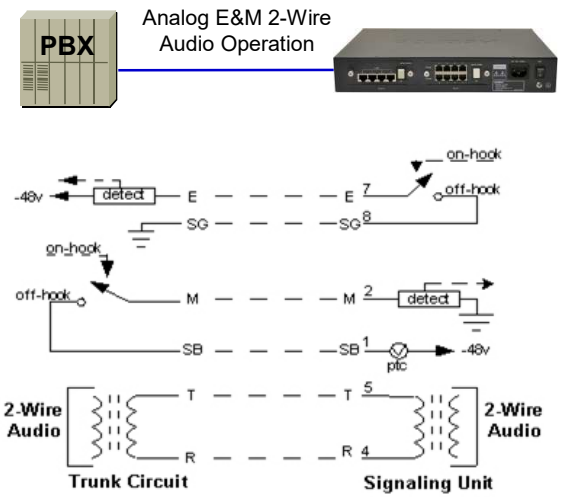

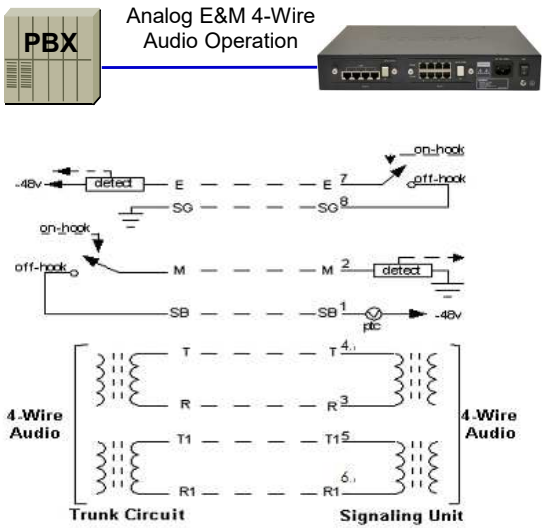

E&M Type III Interface

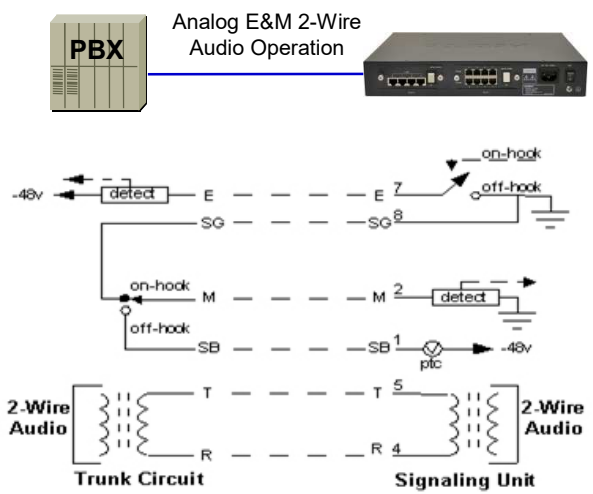

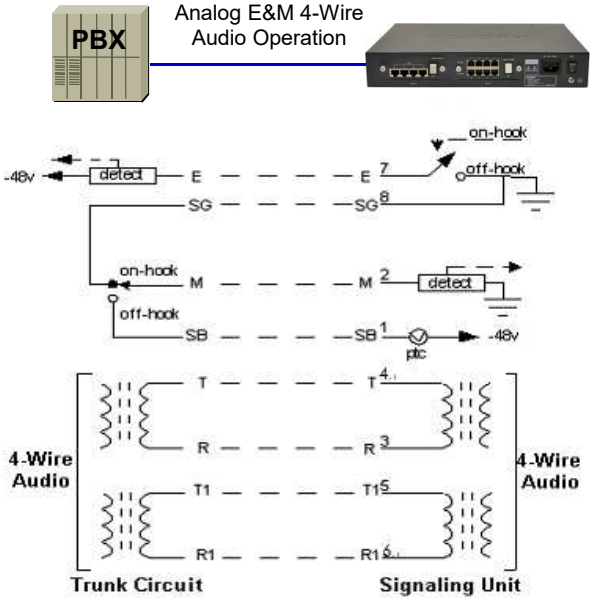

E&M Type V Interface

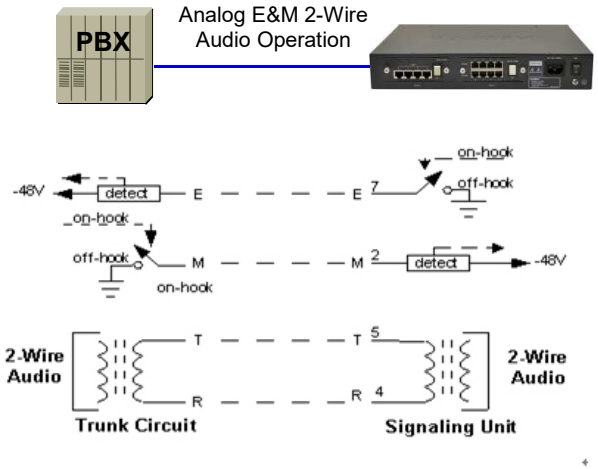

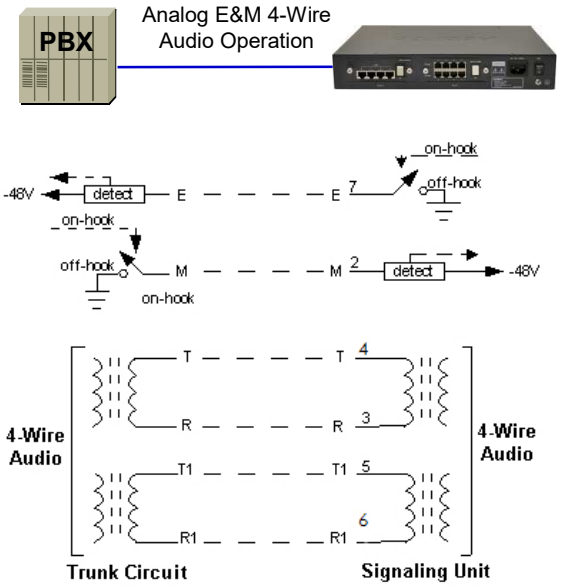

E&M Type Selection

E&M Card Jumper Layout

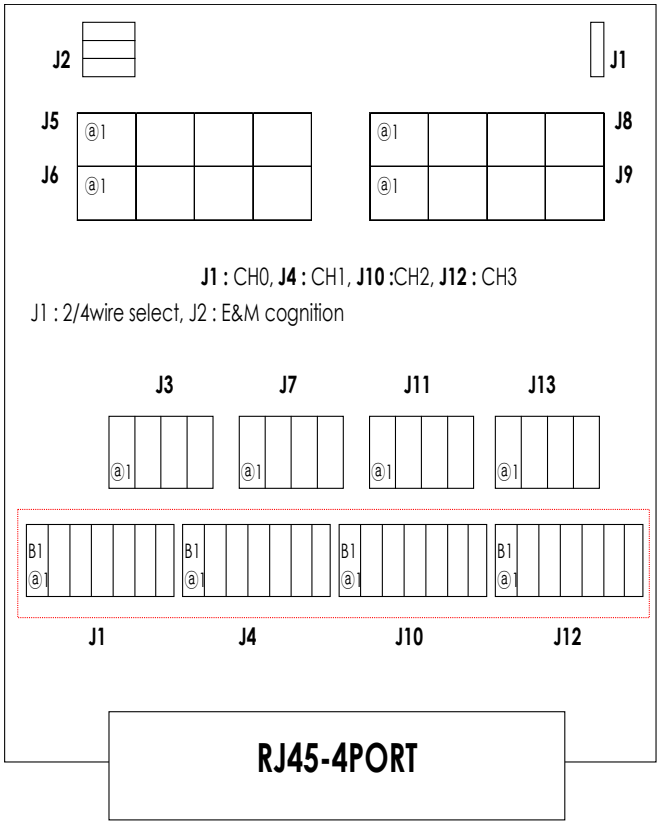

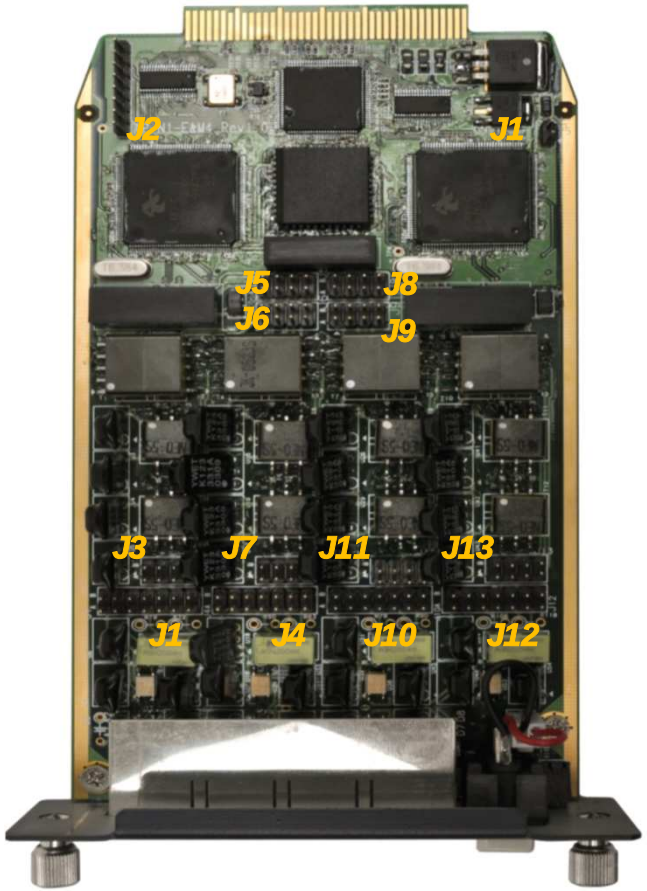

E&M Type Selection

E&M Card Type 1,2,3,5 Selection using Jumper J1,J4,J10,J12

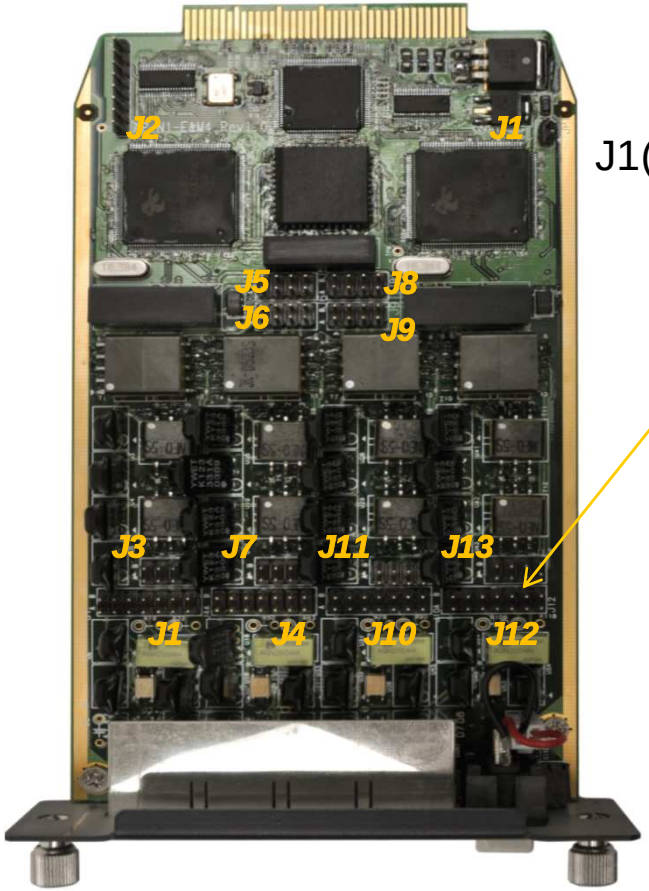

J1(CH# 0),J4(CH# 1),J10(CH# 2),J12(CH# 3)

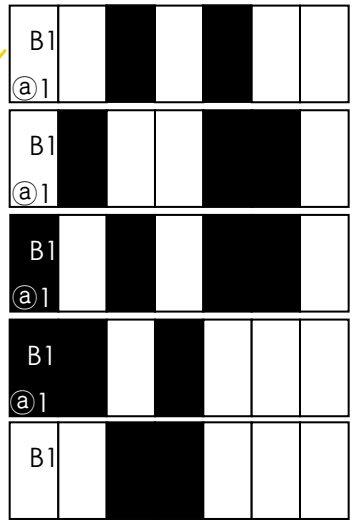

- E&M Type 1 Setting Example
- E&M Type 2 Setting Example
- E&M Type 3 Setting Example
- E&M Type 4 Setting Example
- E&M Type 5 Setting Example

E&M Type Selection

E&M 2-Wire Mode

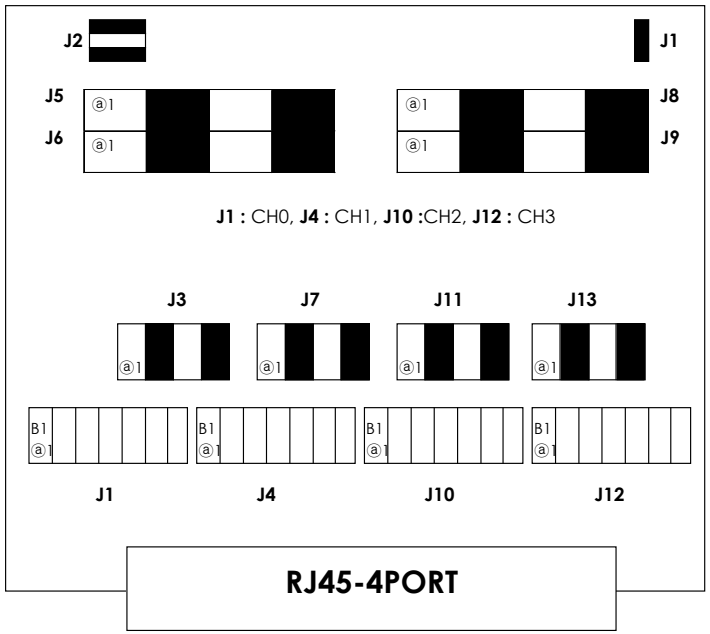

E&M 4-Wire Mode

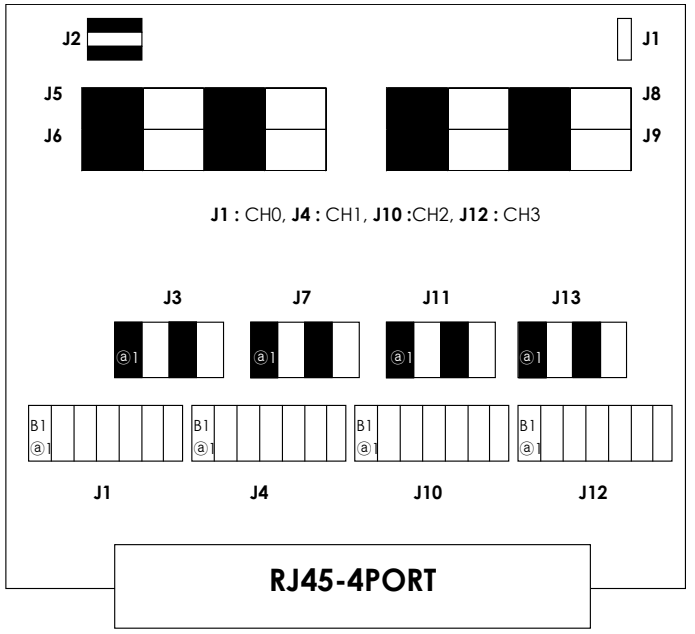

J3, J5 : CH0 2Wire, 4Wire Selection

J7, J6 : CH1 2Wire, 4Wire Selection

J11, J9 : CH2 2Wire, 4Wire Selection

J13, J8 : CH3 2Wire, 4Wire Selection

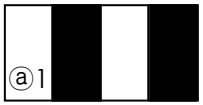

* 2Wire Setting : A2, B2 Connection
A4, B4 Connection



* 4Wire Setting : A1, B1 Connection
A3, B3 Connection

Ordering Information

- **AP1800 Analog VoIP Gateway Hardware**
  - AP1800 VoIP Gateway Main Body
  - RISC Microprocessor with High-end Programmable DSP Architecture
  - 2-ports 10/100Mbps Fast Ethernet(RJ45)
  - Option Module: AP-N1-E&M4, etc
  - Including Network Cable & Internal Power Supply, etc.
- **Built-in APOS Internetworking Software for AP1800**
- **Including 1 Year Hardware Warranty**
- **Product Documents**
  - Install and Operation Guide (PDF)
- **Pricing**
  - AddPac Technology Regional Sales Manager
  - Authorized Sales and Marketing Representatives
  - Please Contact www.addpac.com

Thank you!

AddPac Technology Co., Ltd.
Sales and Marketing

Phone +82.2.568.3848 (KOREA)
FAX +82.2.568.3847 (KOREA)
E-mail sales@addpac.com