AP-ACS2000
Door Access Control Server





AddPac Technology

Sales and Marketing

www.addpac.com

Contents

- DACS(Door Access Control System) Network Diagram
- AP-ACS2000 DACS Main Features
- AP-ACS2000 DACS Hardware Specification
- DACS System Message Flow (Examples)
- DACM (Door Access Control Manager)
- Open API for Third Party Controller
- IP Video Door Phone Comparison Table
- IP Video Wall PAD Comparison Table

Integrated Door Access Control and Call Control

AP-ACS2000 DACS (Door Access Control System)

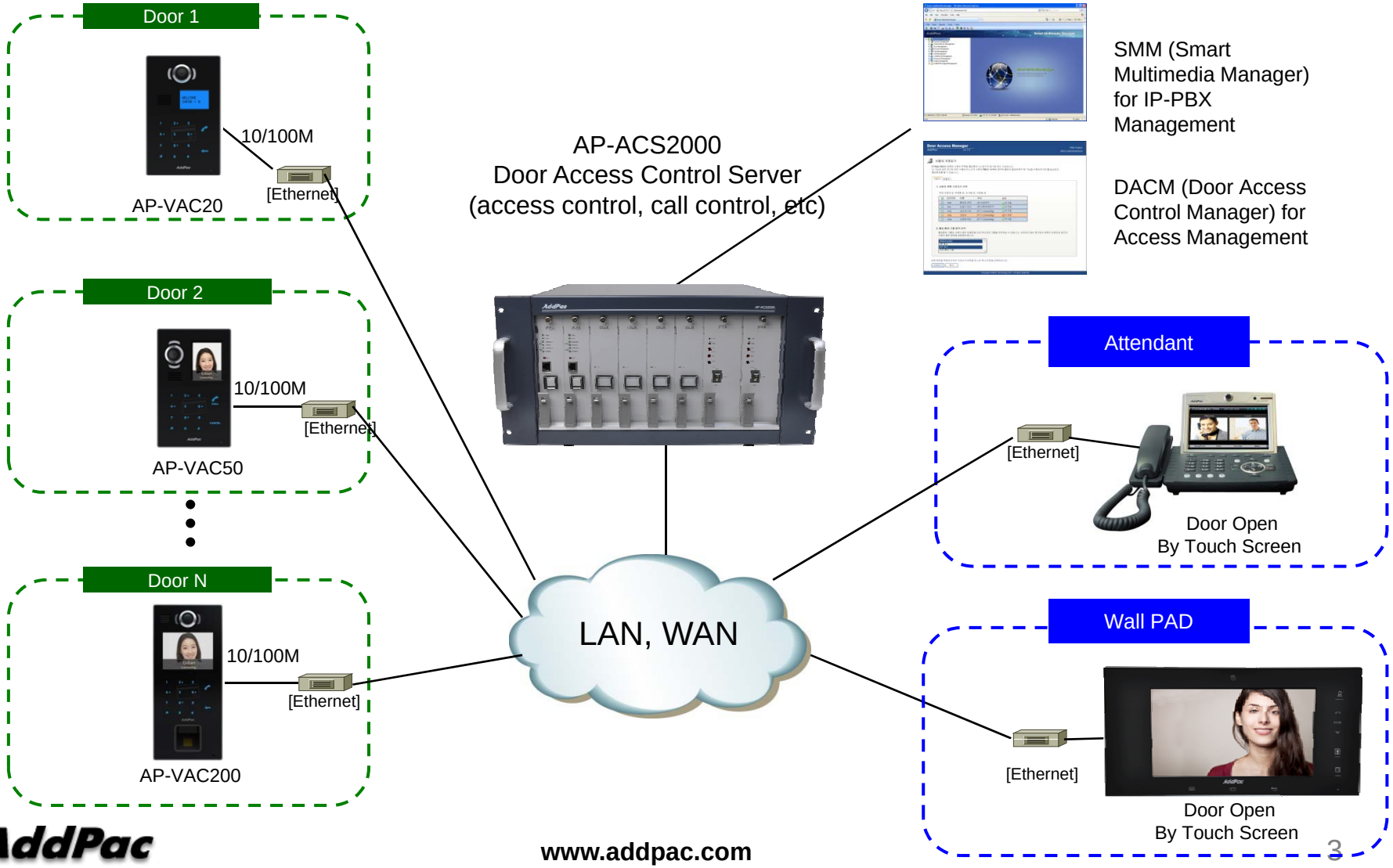

IP-PBX Environment

AP-ACS2000 DACS (Door Access Control System)

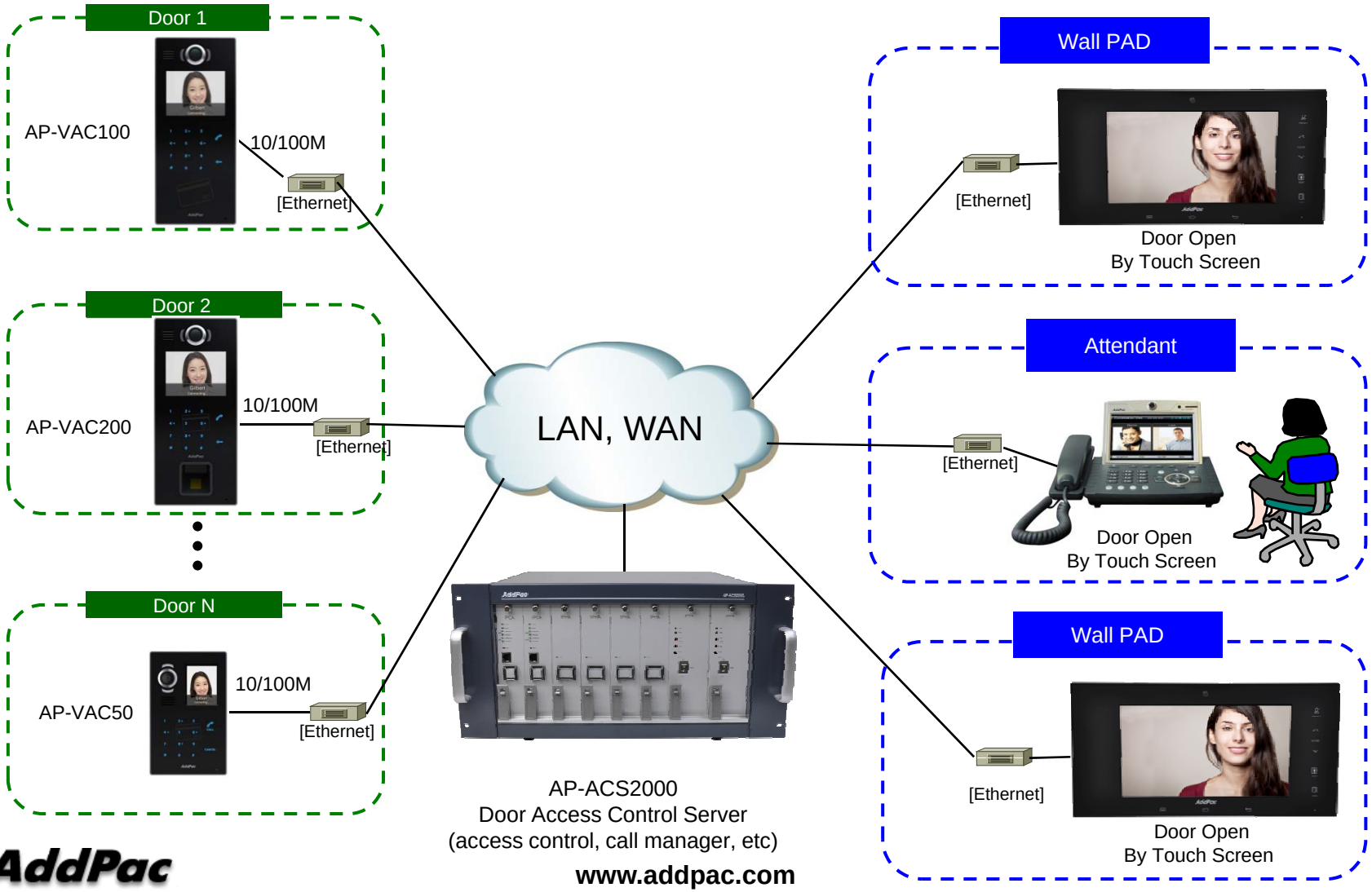

Main Features

AP-ACS2000 DACS (Door Access Control System)

- Door Access Control Application System
- SIP Application Server, Proxy, Registrar and Location Server
- Multiple ITSP Trunk with SIP & H.323 Accounts Support
- High Performance RISC & Programmable DSP Architecture
- Smart Multimedia Manager for IP-PBX Management
- DACM(Door Access Control Manager)
- IPv4/IPv6 based Dual Network Protocol Support
- Internal/External RTP Proxy Function Support
  - External RTP Proxy Server for Private Address : AP-RS2000
- Fault Tolerant and Scalability Architecture
- Firmware Upgradeable Architecture
- Dual System Redundancy Architecture
  - Two(2) 3.5 Inch Hard Disk (RAID 1) / System
  - Two(2) Gigabit Ethernet Interface / System
- Dual Redundancy Power Module

Hardware Features

AP-ACS2000 DACS (Door Access Control System)

- High-End Microprocessor Computing Power
- Main Chassis
  - Dual Redundancy CPU Boards for System Fault Tolerant
    - Two(2) 10/100/1000Mbps Gigabit Ethernet
    - One(1) RS-232C Console (RJ45)
    - Two(2) 3.5 Inch Hard Disk Interface Slot (RAID 1)
  - Dual Redundancy Power Supply Module
  - Hot-Swap Features

Hardware Specification

AP-ACS2000 DACS (Door Access Control System)

AP-ACS2000 Front Side



CPU Board
(Hot-Swap)

Dual 3.5 Inch
HDD Disks(RAID1)
: Hot-Swap

Dual Power Supply
Modules
(Hot-Swap)

Hardware Specification

AP-ACS2000 DACS (Door Access Control System)

AP-ACS2000 Back Side



FANs for Air Cooling

LAN0 for Active CPU

LAN1 for Active CPU

LAN0 for Standby CPU

LAN1 for Standby CPU

Plug for PSU Module B

Plug for PSU Module A

DACS
System Message Flow

DACS System Message Flow

Registration and KeepAlive

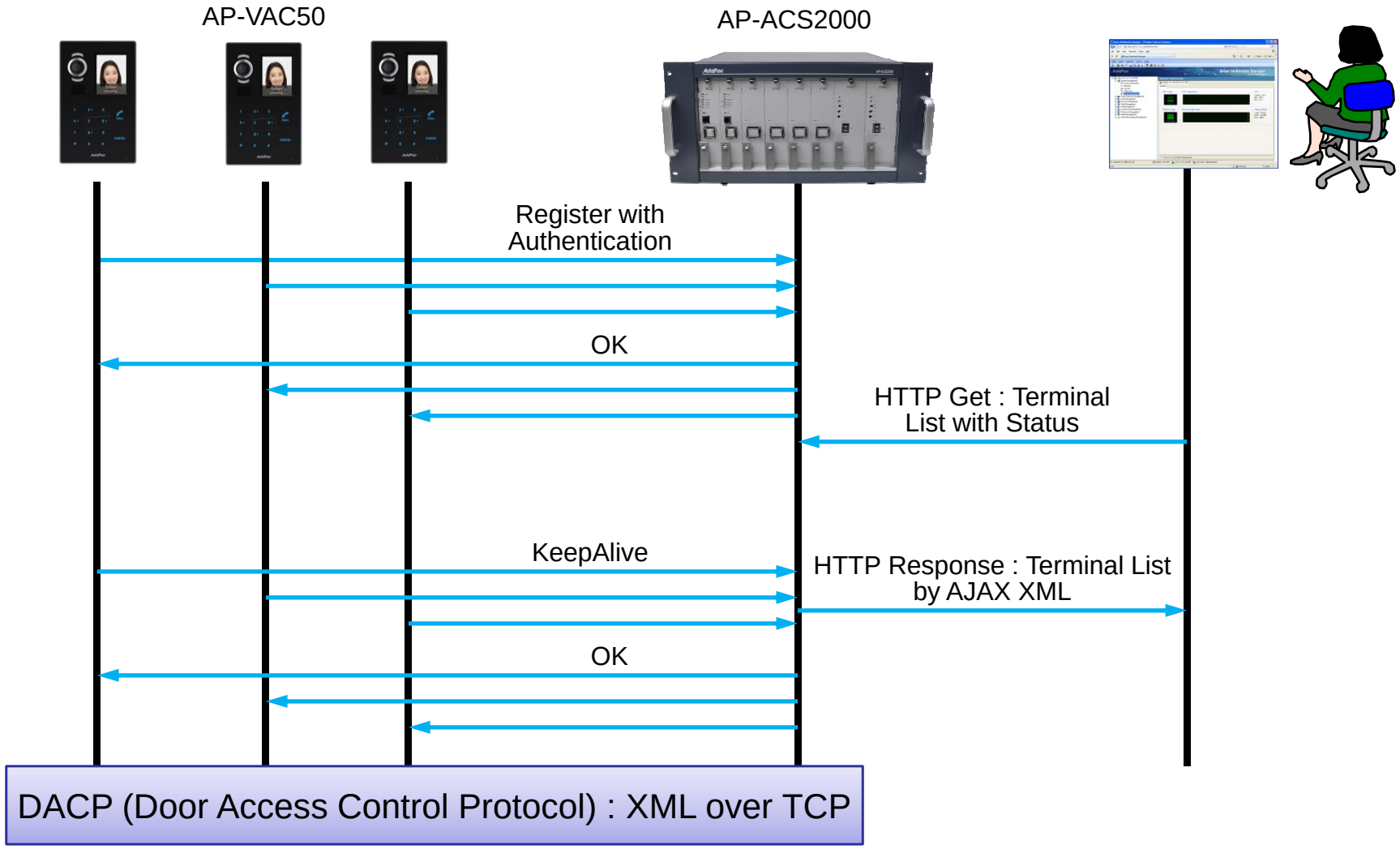

DACS System Message Flow

Access Privilege and Schedule Download

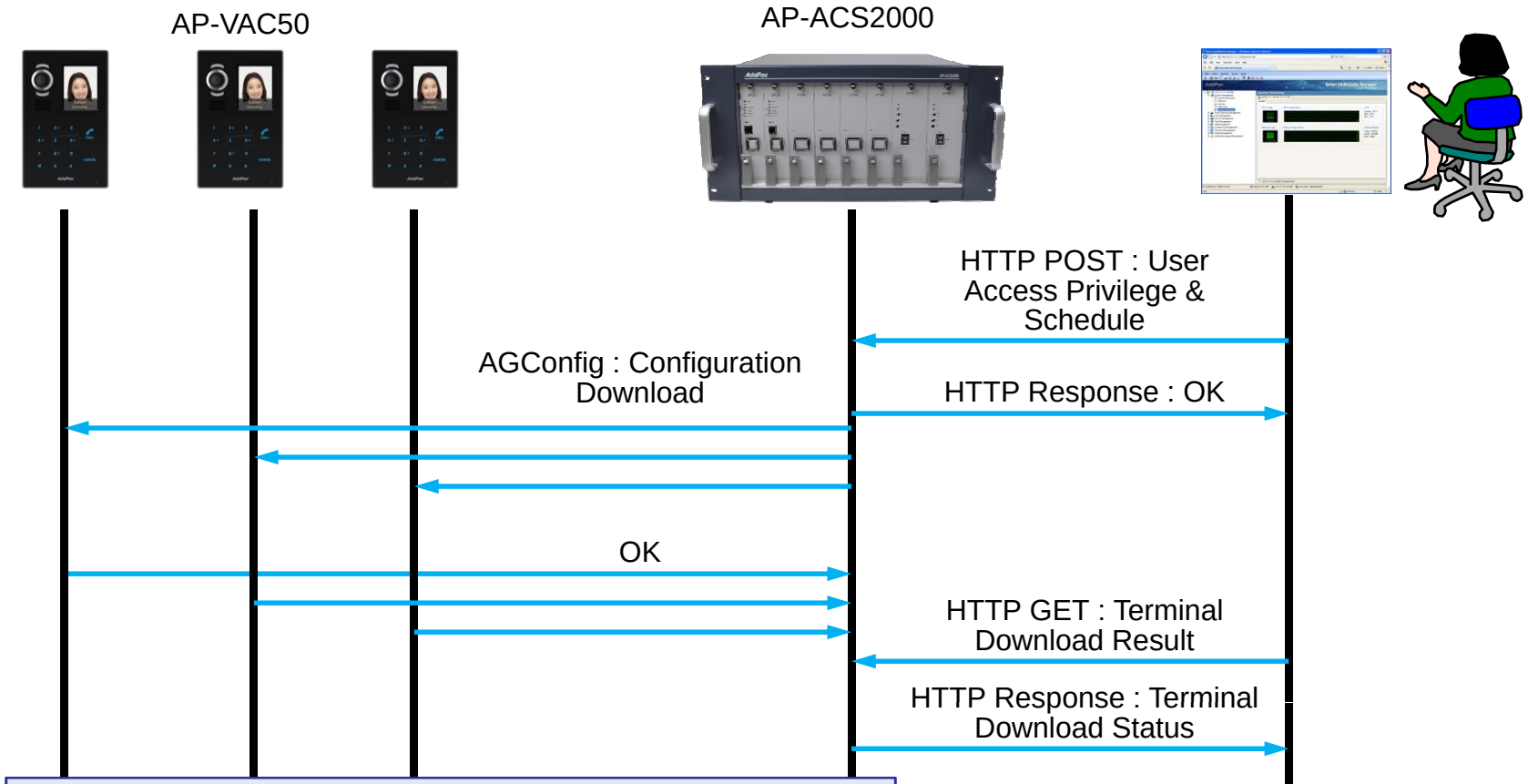

DACP Handle Full or Partial Configuration Download for Supporting Efficient and Large Scale Network

DACS System Message Flow

RF Card Read/Write and Registration

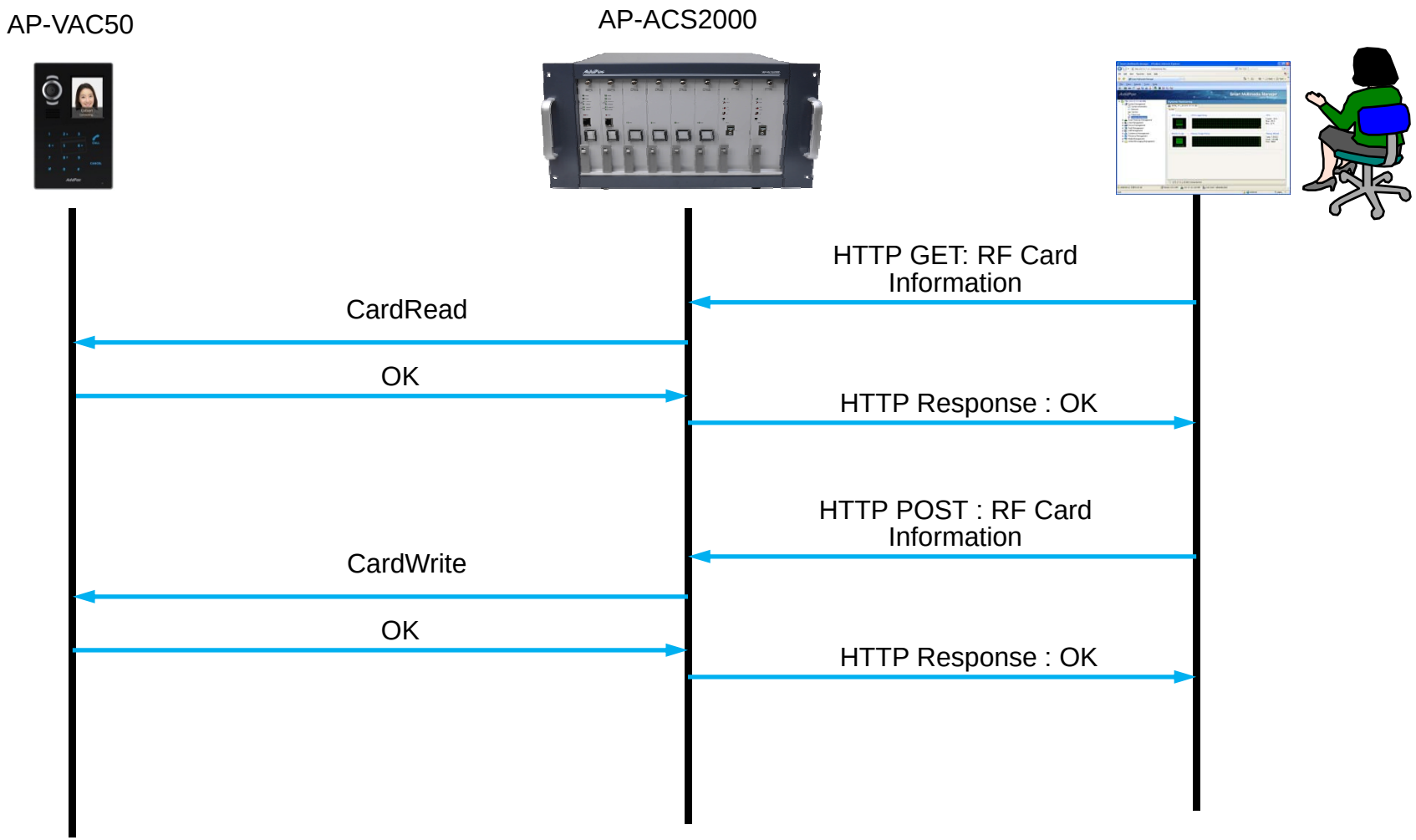

DACS System Message Flow

Door Open by RF Card or Password

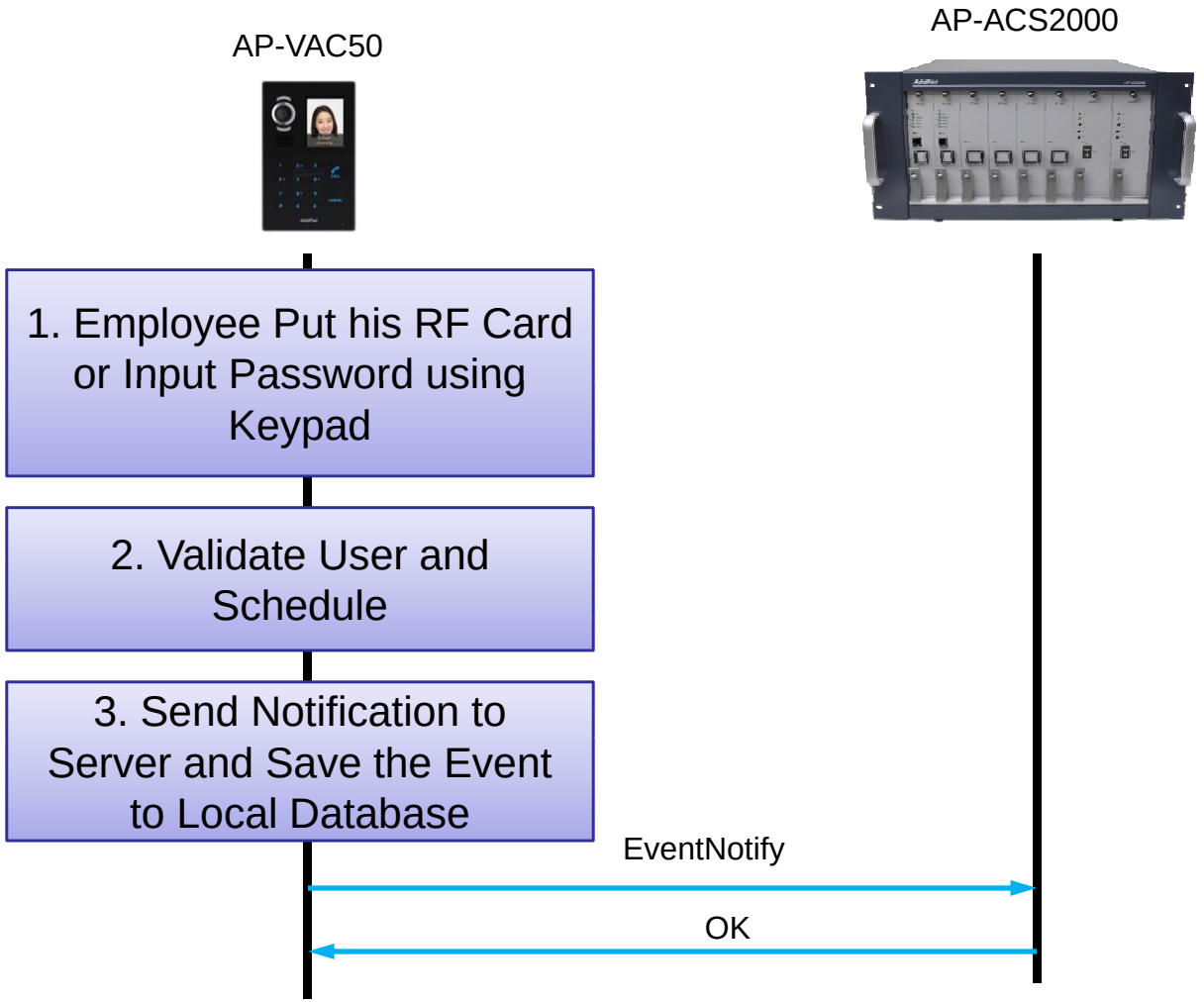

DACS System Message Flow

Door Open by Other Terminal

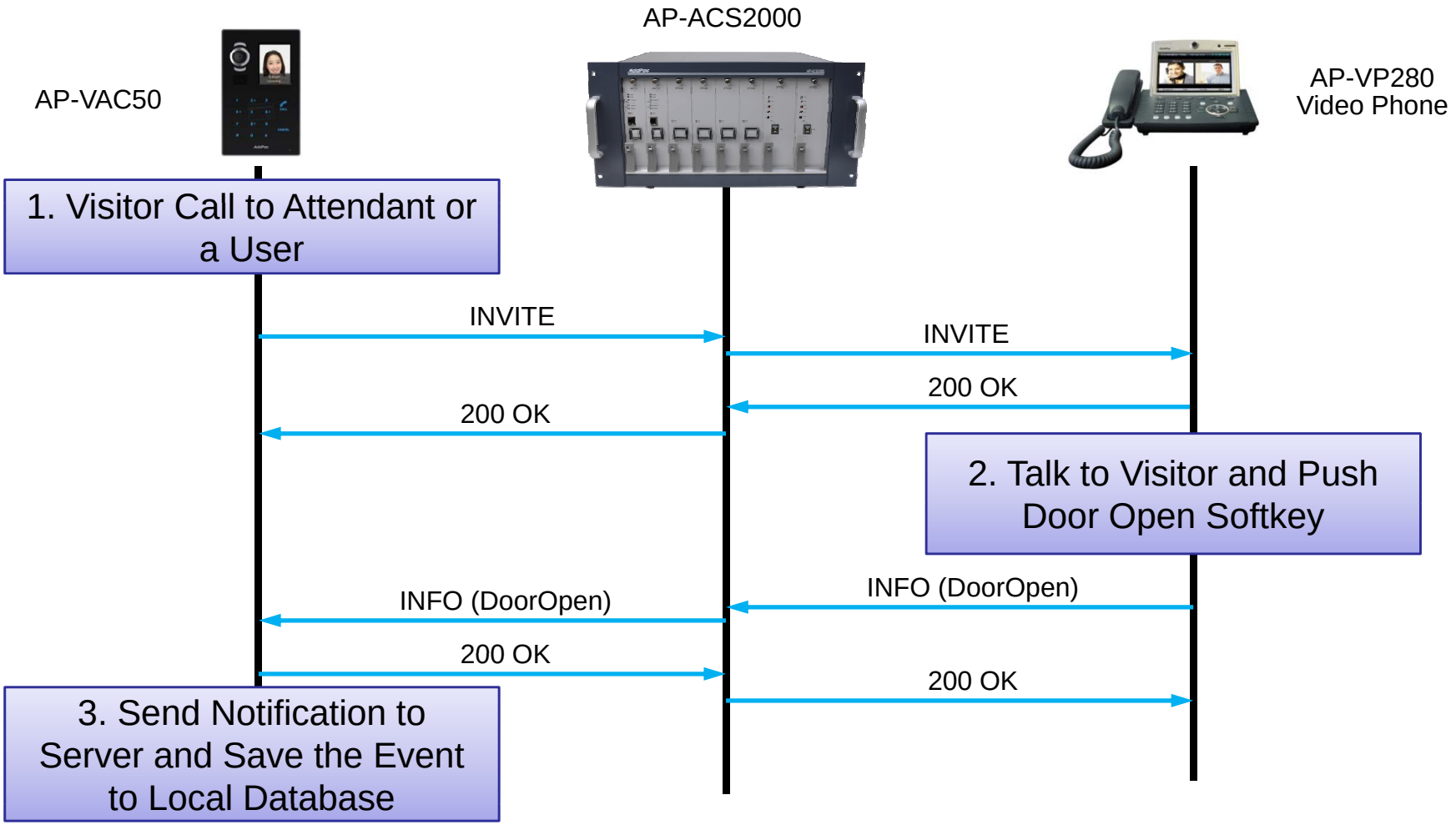

Door Access Control Manager for AP-ACS2000

DACM (Door Access Control Manager)

Main Web Page

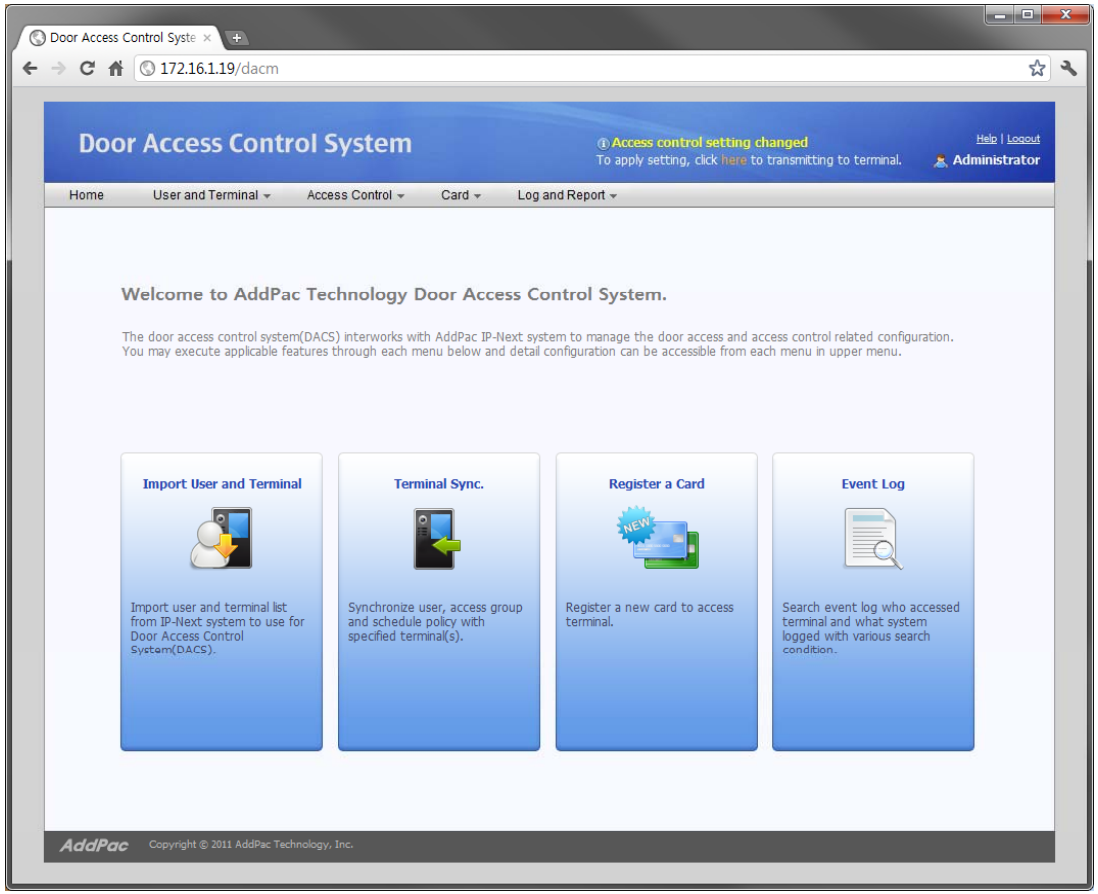

DACM (Door Access Control Manager)

Import User and Terminal

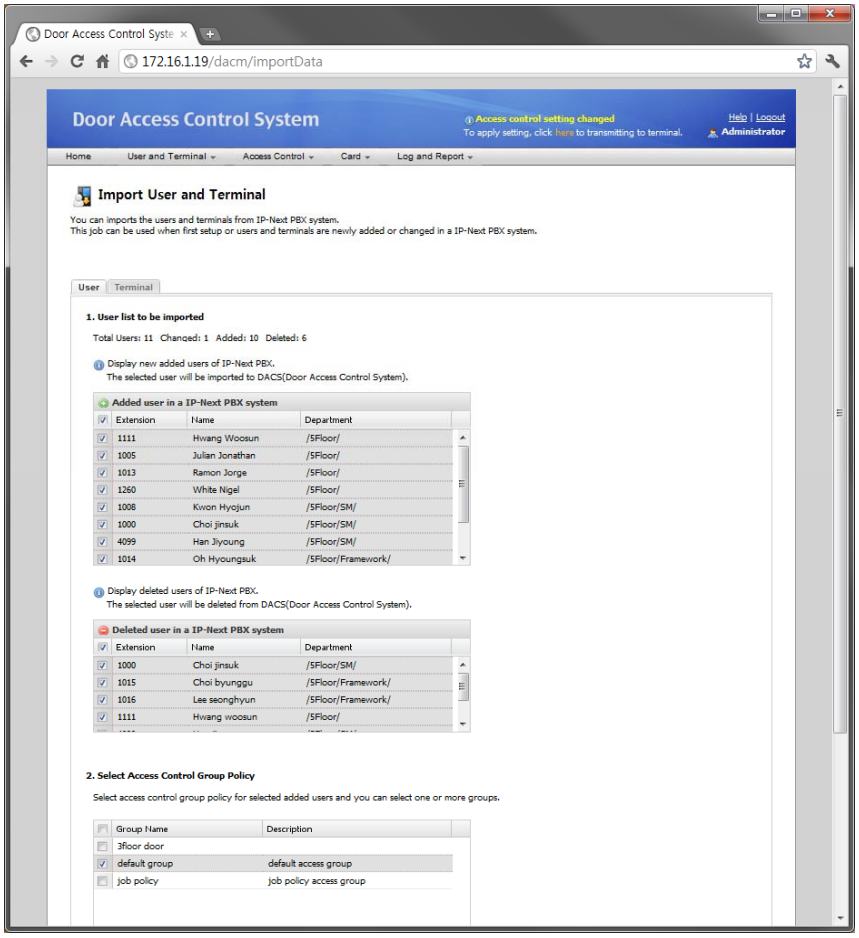

DACM (Door Access Control Manager)

User List

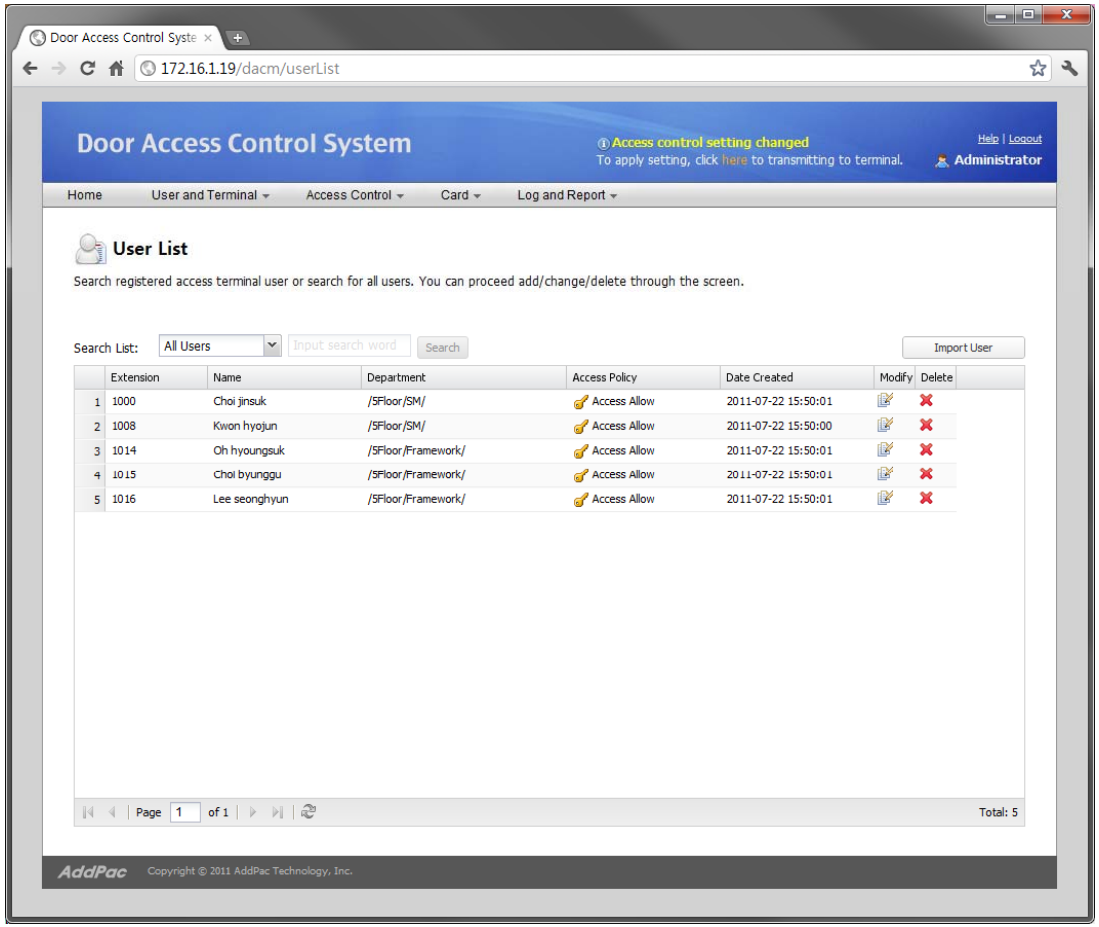

DACM (Door Access Control Manager)

Terminal List

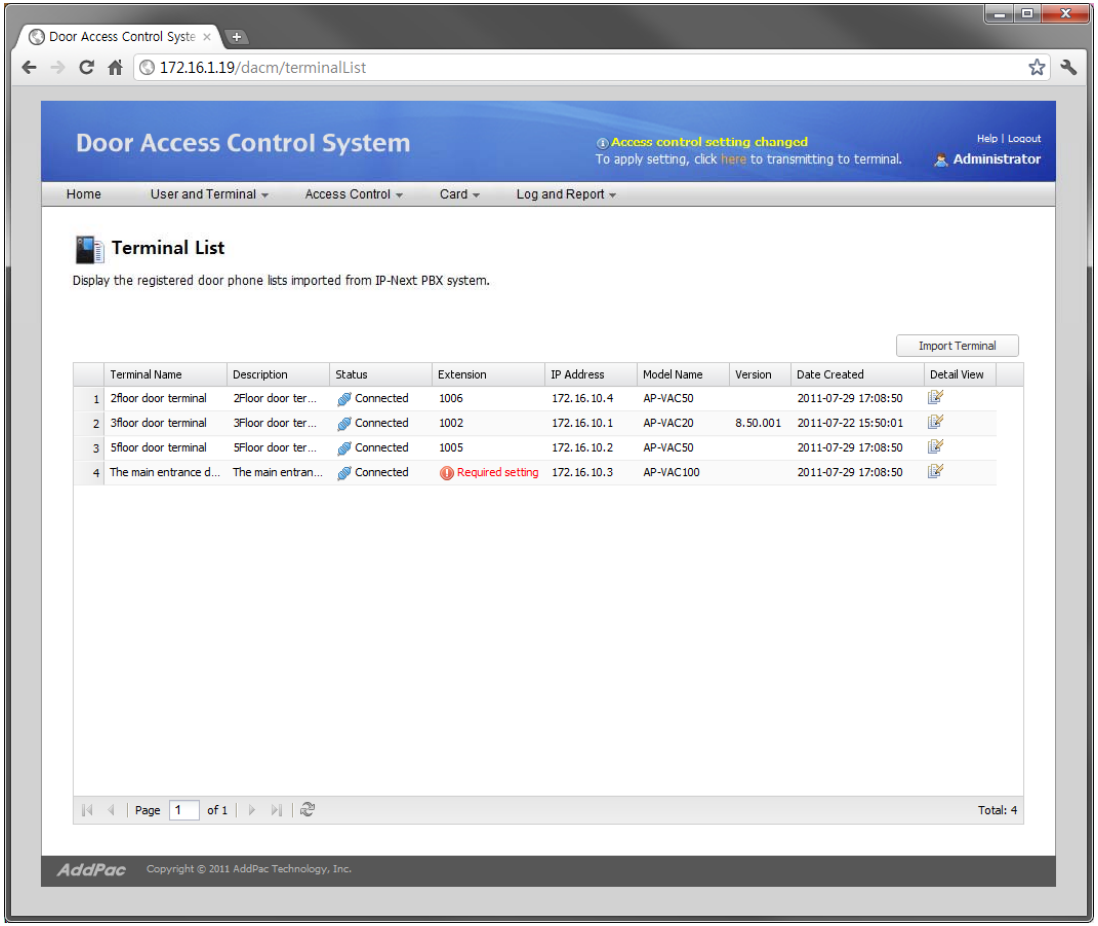

DACM (Door Access Control Manager)

Access Control Group Management

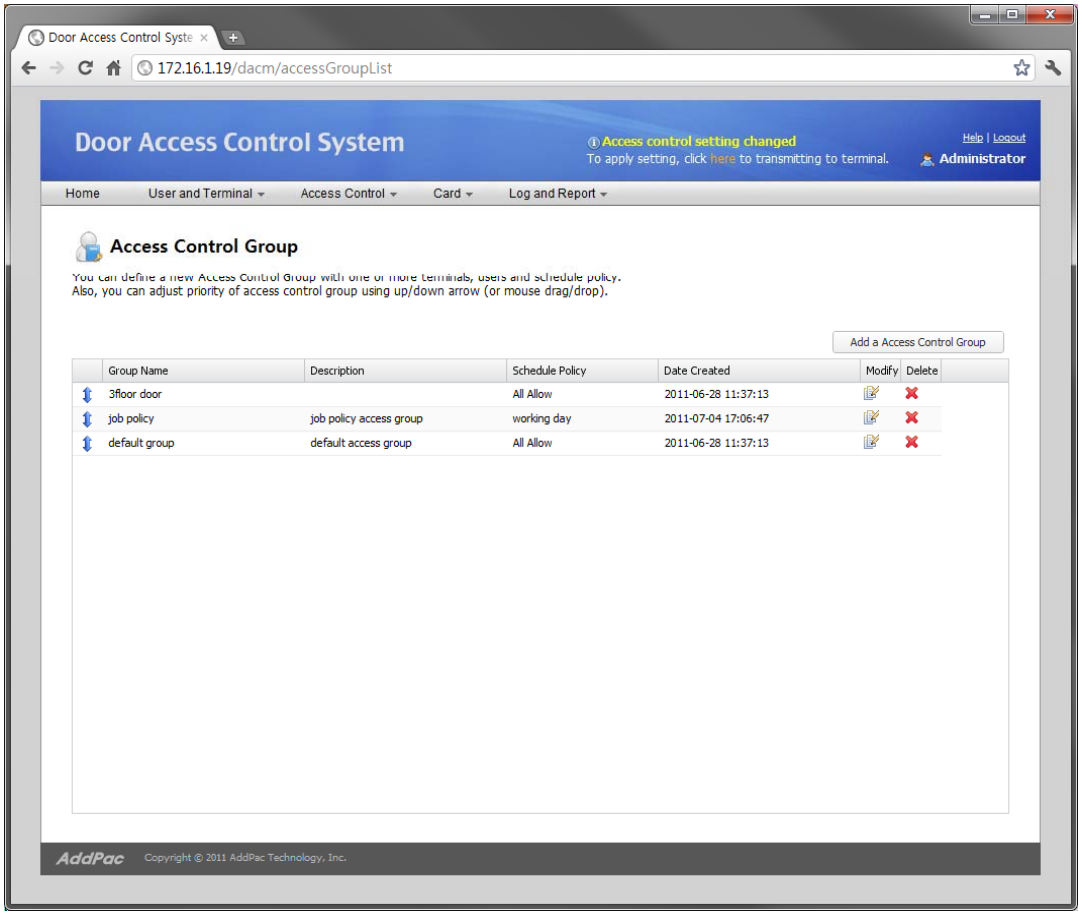

DACM (Door Access Control Manager)

Configuration Download to Terminal

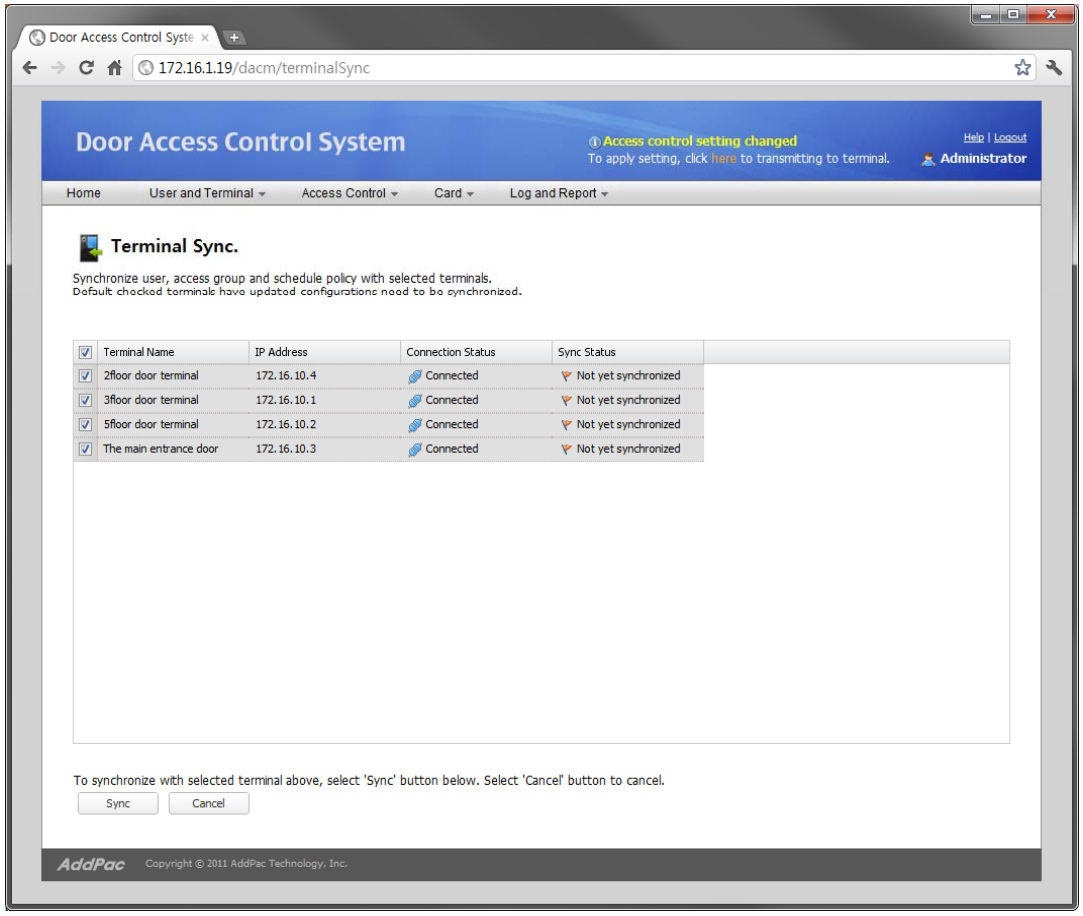

DACM (Door Access Control Manager)

RF Card Management

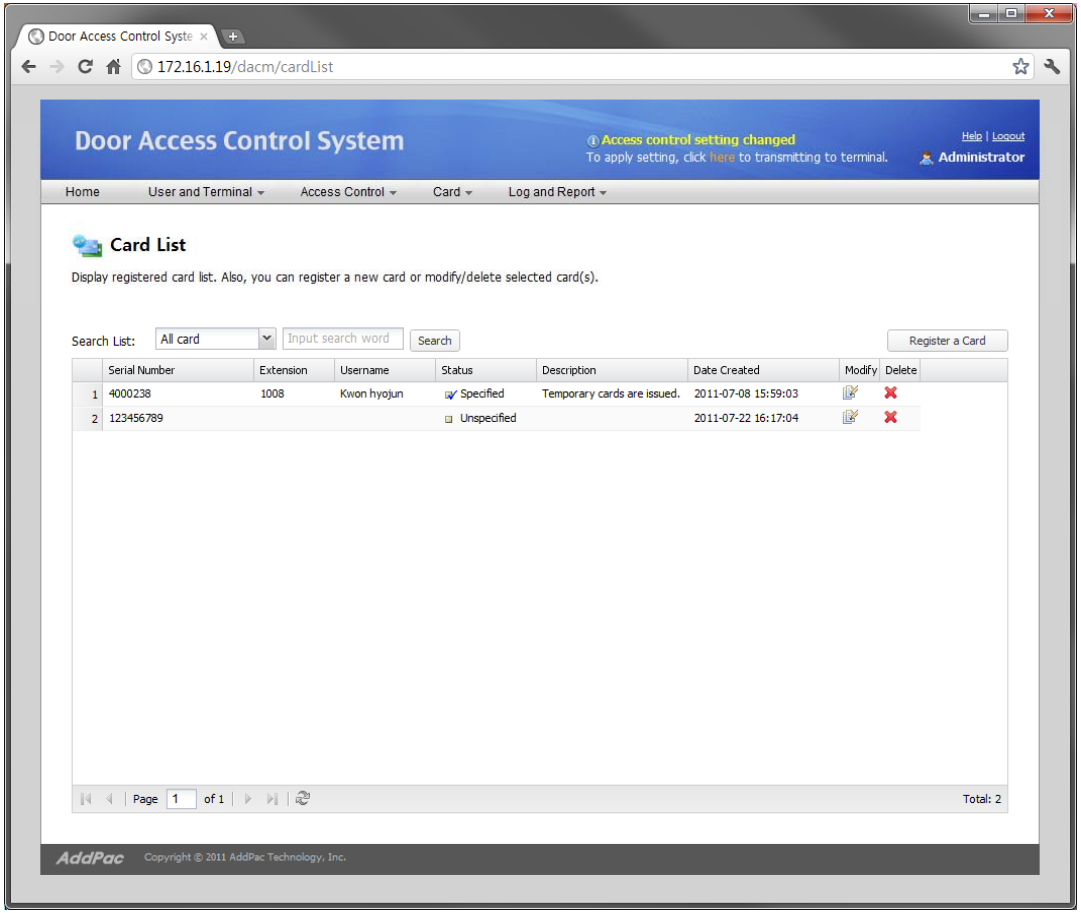

DACM (Door Access Control Manager)

Access Log Management

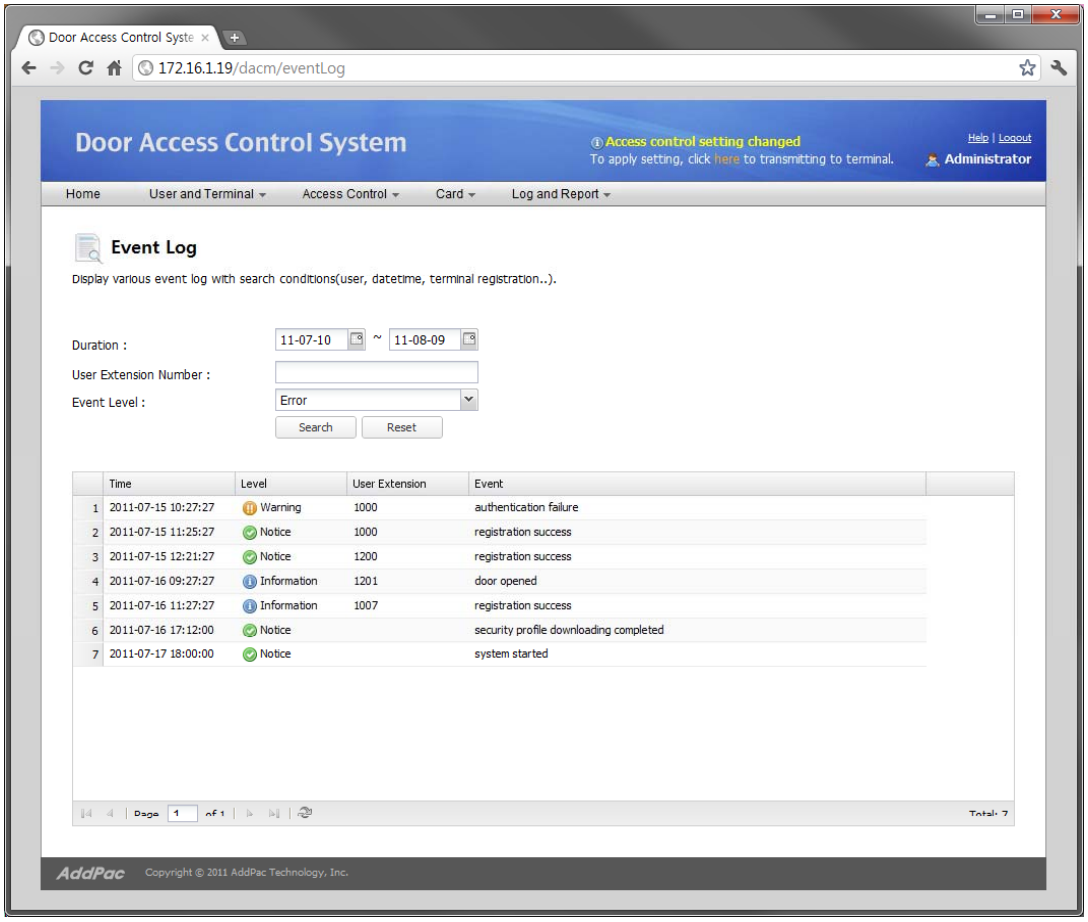

AP-ACS2000 Open API

Open API

Open API for 3’rd Party Management System

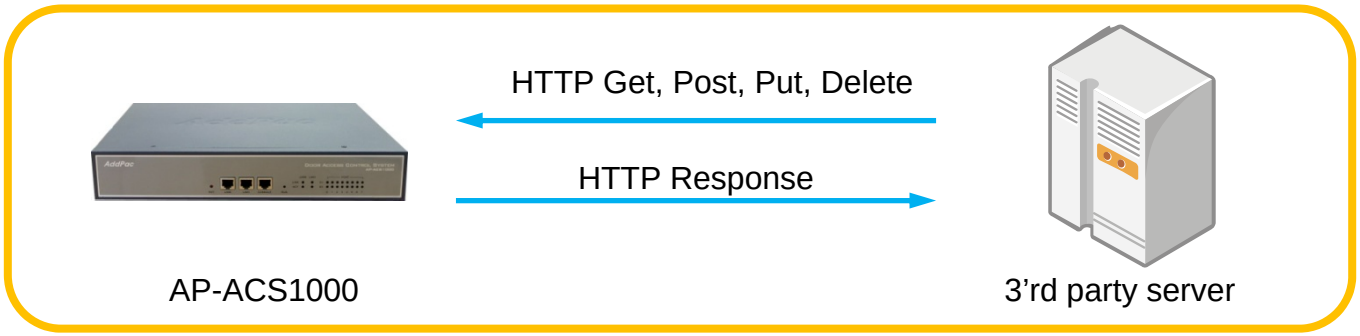

- HTTP based RESTful Open API for Door Access Management
- XML based Flexible and Expandable Message Contents
- Provides More than 40 APIs as Bellow
  - user_list(GET), user(GET, POST, PUT, DELETE), …
  - terminal_list(GET), terminal(GET, POST, PUT, DELETE), …
  - access_group(GET, POST, PUT, DELETE), priority (PUT), …
  - card_list(GET), card(POST, PUT, DELETE), …
  - schedule_template(GET, POST, PUT, DELETE), rule(GET, POST, PUT, DELETE) ,…

IP Video Door Phones

IP Video Door Phone Comparison Table

Model Service Features	AP-VAC200 	AP-VAC100 	AP-VAC50 	AP-VAC20 
Duplex (Voice)	Full Duplex	Full Duplex	Full Duplex	Full Duplex
Key Pad	3x4 Key Support	3x4 Key Support	3x4 Key Support	3x4 Key Support
LCD	3.5 Inch	3.5 Inch	2inch LCD	Graphic LCD
RF Card	Support	Support	Support	Support
Fingerprint	N/A	N/A	N/A	N/A
Video Codec	H.264/MPEG4	H.264/MPEG4	H.264/MPEG4	H.264/MPEG4
Voice Codec	G.711	G.711	G.711	G.711
Signaling	H.323/SIP	H.323/SIP	H.323/SIP	H.323/SIP
MIC & Speaker Phone	Support	Support	Support	Support
LAN Port	1	1	1	1
PoE(Option)	Support	Support	Support	Support

AddPac

IP Video Door Phone Comparison Table

Model Service Features	AP-VAC150 	AP-VAC80 
Duplex (Voice)	Full Duplex	Full Duplex
Key Pad	Touch Screen based Key Support	Touch Screen based Key Support
LCD	5 Inch LCD	5 inch LCD
RF Card	Support	Support
Fingerprint	Support	N/A
Video Codec	H.264/MPEG4/H.263	H.264/MPEG4/H.263
Voice Codec	G.711	G.711
Signaling	H.323/SIP	H.323/SIP
MIC & Speaker Phone	Support	Support
LAN Port	1	1
PoE(Option)	Support	Support

Smart IP Wall PAD Comparison Table

Model Service Features	AP-VWP100 	AP-VWP90 	AP-VWP80 	AP-VWP50 
Duplex (Voice)	Full Duplex	Full Duplex	Full Duplex	Full Duplex
LCD	7 Inch	7 Inch	7 Inch	5 Inch
Touch Screen	Support	Support	Support	Support
Camera(Option)	SD(VGA)	SD(VGA)	SD(VGA)	SD(VGA)
Video Codec	SD, H.264/MPEG4/H.263	SD, H.264/MPEG4/H.263	SD, H.264/MPEG4/H.263	SD, H.264/MPEG4/H.263
Voice Codec	G.722, G.711, G.726	G.722, G.711, G.726	G.722, G.711, G.726	G.722, G.711, G.726
Signaling	H.323/SIP	H.323/SIP	H.323/SIP	H.323/SIP
MIC & Speaker Phone	Support	Support	Support	Support
LAN Port	1	1	1	1
Camera(Option)	SD(VGA)	SD(VGA)	SD(VGA)	SD(VGA)
Analog Door Phone Interface (option)	SD	SD	SD	SD
PSTN Line (Option)	Support	Support	Support	Support
PoE(Option)	Support	Support	Support	Support

Thank you!

AddPac Technology Co., Ltd.
Sales and Marketing

Phone +82.2.568.3848 (KOREA)
FAX +82.2.568.3847 (KOREA)
E-mail : sales@addpac.com