Smart Home Equipment Solution





AddPac

AddPac Technology

2015, Sales and Marketing

www.addpac.com

Contents

- Smart Home Solution Network Diagram
- Smart Home Solution Overview
- Smart SIP Wall PADs
- Smart SIP Video Door Phones
- Smart Hubs for Sensor Devices
- Smart SIP Video Phone for Security Guard
- Smart Phone/Tab Appl.

Smart Home Solution Network Diagram

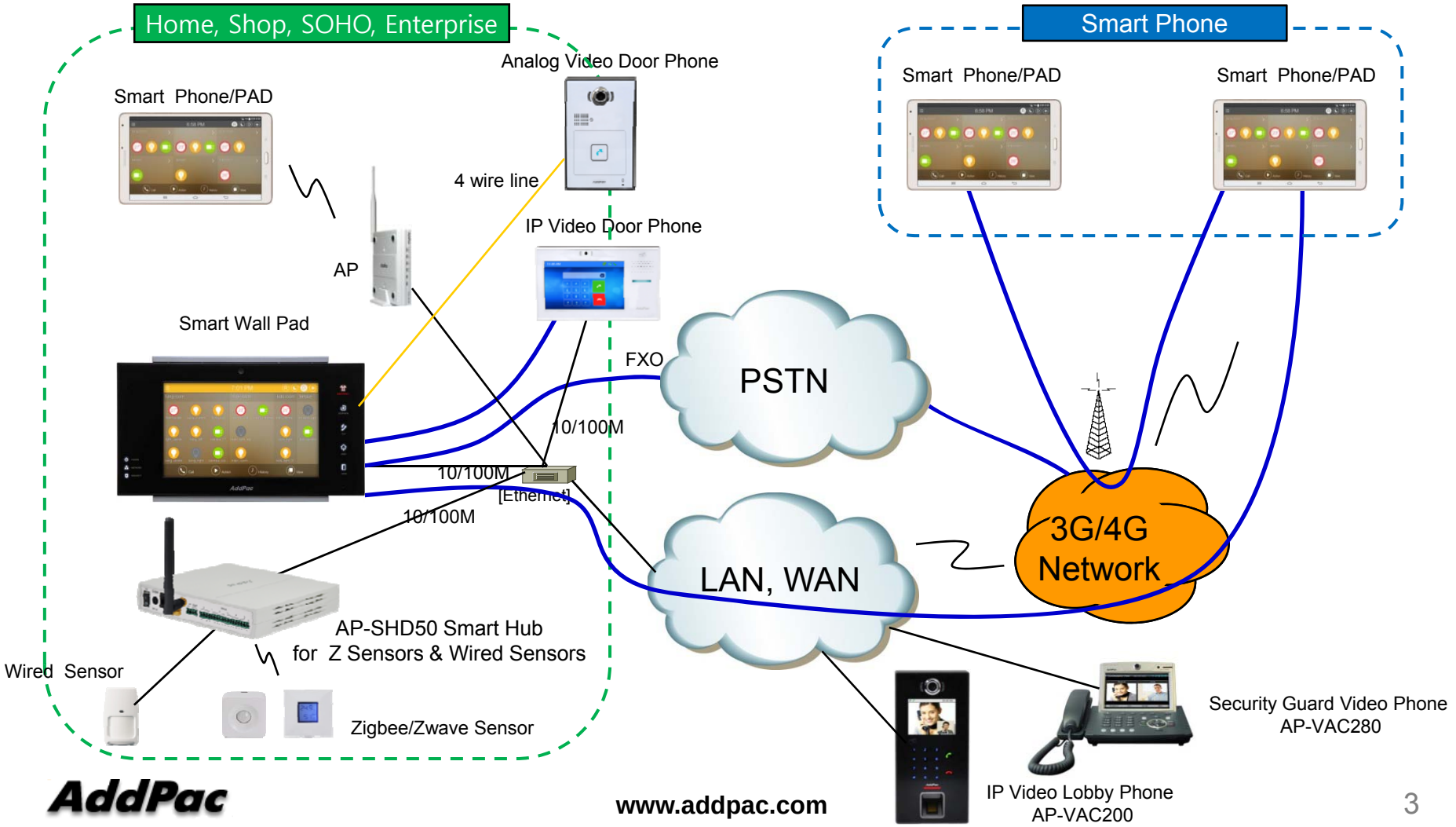

Overview

Smart Home Equipment Table

Smart Home Products	Description	Model
	Smart IP Wall PAD (SIP Standard Signaling)	AP-VWP150, AP-VWP100, AP-VWP90, AP-VWP80
	IP Video Door Phones (SIP Standard Signaling)	AP-VAC80, AP-VAC150
 	Analog Video Door Phones	AP-VAC20A, AP-VAC50A
	IP Lobby Phones (SIP Standard Signaling)	AP-VAC100, AP-VAC200
	IP Video Phone (Bidirectional two-way video)	AP-VP280, AP-VP120
	Smart Hub for Zigbee/Zwave Sensors	AP-SH50, AP-SHD100
	Smart Phone and Tab/Pad Appl.	AP-ASH100

Smart IP Wall PAD
(SIP Signaling Support)

Smart IP Wall PAD Comparison Table

Model Service Features	AP-VWP150 	AP-VWP100 	AP-VWP90 	AP-VWP80 
Duplex (Voice)	Full Duplex	Full Duplex	Full Duplex	Full Duplex
LCD	7 Inch	7 Inch	7 Inch	7 Inch
Touch Screen	Support	Support	Support	Support
Camera(Option)	SD(VGA)	SD(VGA)	SD(VGA)	SD(VGA)
Video Codec	SD, H.264/MPEG4/H.263	SD, H.264/MPEG4/H.263	SD, H.264/MPEG4/H.263	SD, H.264/MPEG4/H.263
Voice Codec	G.722, G.711, G.726	G.722, G.711, G.726	G.722, G.711, G.726	G.722, G.711, G.726
Signaling	H.323/SIP	H.323/SIP	H.323/SIP	H.323/SIP
MIC & Speaker Phone	Support	Support	Support	Support
LAN Port	USB for Wifi, 10/100M Fast Ethernet	10/100M Fast Ethernet	10/100M Fast Ethernet	10/100M Fast Ethernet
Camera(Option)	SD(VGA)	SD(VGA)	SD(VGA)	SD(VGA)
Analog Door Phone Interface (option)	SD	SD	SD	SD
PSTN Line (Option)	Support	Support	Support	Support
PoE(Option)	Support	Support	Support	Support

AP-VWP150
Smart IP Wall PAD

Product Overview

AP-VWP150 IP Video Wall PAD

- High Performance IP Video Wall PAD Solution
- TFT Color LCD, Touch Screen, Touch Sensor, Internal MIC & Speaker
- High Quality “7 Inch LCD, 800x480 Video Resolution
- SIP VoIP Signaling Stack Embedded (Optional H.323)
- High-performance Video/Voice Codec Support
  - H.264/MPEG4/H.263, G.711, etc
- Network Interface
  - One(1) 10/100Mbps Fast Ethernet
  - One(1) USB 2.0 Interface for External WiFi USB Module (Option)
- High Quality Speaker Phone Features
- PSTN with CID Interface Support (Option)
- Power Acoustic Echo Canceller (Option)
- PoE(Power over Ethernet) or Internal SMPS Power Support (Option)
- Video Camera Sensor (Option)
- Powerful Network Protocols (PPPoE, DHCP, Static Routing, etc)
- Firmware Upgradeable Architecture
- Advanced Voice QoS Mechanism

Hardware Specification

AP-VWP150 IP Video Wall PAD

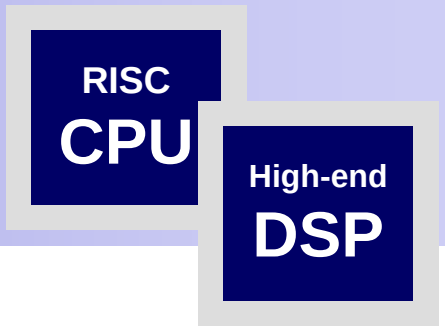

- RISC+DSP Microprocessor Computing Power
- Audio and Voice Interface
  - Internal MIC
  - Internal Speaker
- Video Camera Interface (Option)
- TFT Color LCD Interface with Touch Screen
  - 7 Inch LCD, 800 x 480, D1 Video Resolution
- Network Interface
  - One(1) 10/100Mbps Fast Ethernet
  - One(1) USB 2.0 Interface for External WiFi USB Module (Option)
- PSTN Interface with CID (Caller ID Detection)
- Powerful Acoustic Echo Canceller (Option)
  - Half Duplex (Default)
  - Full Duplex, Powerful Acoustic Echo Canceller (Option)
- Wall Mount
- Power Supply
  - Power over Ethernet (Option)
  - Internal SMPS Power (Option)
  - External Power Adaptor (Default)

Hardware Specification

AP-VWP150 IP Video Wall PAD

- Acoustic Echo Canceller (Option)
  - Full-duplex operation during double-talk situations
  - One channel AEC, one channel LEC up to 256ms shared
  - Cancels echoes with up to 10dB echo return
  - Advanced noise reduction(up to 20dB)
- Speaker
  - Impedance : 8 +-15%ohm at 1kHz, 1.0 Vrms
  - Sound Pressure : 90 +- 3dB at 0.1W/10 CM
    at 800Hz, 1.0kHz, 1.2kHz, 1.5kHz
  - Resonance Level : 550Hz +- 20%Hz at Fo Hz, 1.0Vrms
  - Frequency Range : Fo Hz ~20kHz
  - Input Power : Normal : 1.0 W, Max : 2.0W
- Audio Amplifier
  - 1-W BTL Output(5V, 0.11 % THD+N)
  - Uncompensated Gains of 2 to 20 (BTL Mode)
  - Thermal and Shot-circuit Protection
  - High Supply Ripple Rejection Ratio
- PoE(Power over Ethernet), Option
  - IEEE802.3af compliant
  - Input voltage range 36V to 57V
  - Short-circuit Protection

Hardware Specification

AP-VWP150 IP Video Wall PAD

- LCD Controller
  - One-Chip Solution for amorphous TFT-LCD
  - Support resolution up to 480xRGBx640
  - Built-in 172800 bytes internal RAM
  - 6,8,16, and 18-bit RGB Interface
  - Resize Function (x ½, x ¼)
  - On-Chip Power Management System

- Video Camera (Option)
  - High Sensitivity for low-light operation
  - Output support for Raw RGB, RGB, and YCrCb format
  - Image Size : VGA, QVGA, and any size scaling down from CIF to 40x30
  - Support AEC, AGC,AWB, ABF, ABLC
  - Saturation Level, Edge Enhancement Level, De-noise level Auto adjust

Hardware Specification

AP-VWP150 IP Video Wall PAD

RISC CPU

High-end DSP

Front Side



Hardware Specification

AP-VWP150 IP Video Wall PAD

RISC CPU

High-end DSP

Back Side

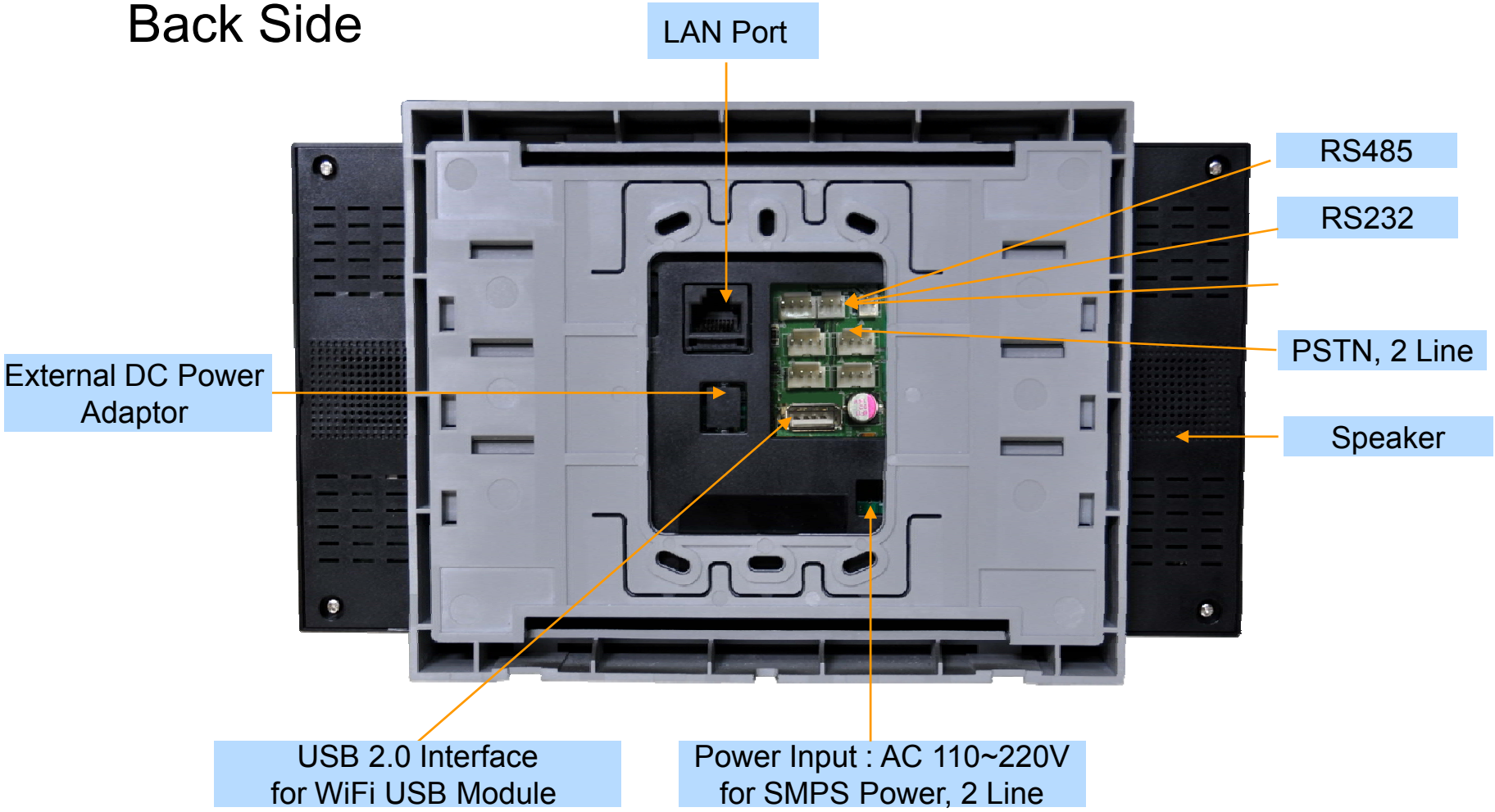

AP-VWP100
Smart IP Wall PAD

Product Overview

AP-VWP100 IP Video Wall PAD

- High Performance IP Video Wall PAD Solution
- TFT Color LCD, Touch Screen, Touch Sensor, Internal MIC & Speaker
- High Quality “7 Inch LCD, VGA(640x480) Video Resolution
- SIP VoIP Signaling Stack Embedded (Optional H.323)
- High-performance Video/Voice Codec Support
  - H.264/MPEG4/H.263, G.711, etc
- One(1) 10/100Mbps Fast Ethernet
- High Quality Speaker Phone Features
- PSTN with CID Interface Support (Option)
- Power Acoustic Echo Canceller (Option)
- PoE(Power over Ethernet) or Internal SMPS Power Support (Option)
- Video Camera Sensor (Option)
- Powerful Network Protocols (PPPoE, DHCP, Static Routing, etc)
- Firmware Upgradeable Architecture
- Advanced Voice QoS Mechanism

Hardware Specification

AP-VWP100 IP Video Wall PAD

- RISC+DSP Microprocessor Computing Power
- Audio and Voice Interface
  - Internal MIC
  - Internal Speaker
- Video Camera Interface (Option)
- TFT Color LCD Interface with Touch Screen
  - 7 Inch LCD, 640 x 480, D1 Video Resolution
- Network Interface
  - One(1) 10/100Mbps Fast Ethernet
- PSTN Interface with CID (Caller ID Detection)
- Powerful Acoustic Echo Canceller (Option)
  - Half Duplex (Default)
  - Full Duplex, Powerful Acoustic Echo Canceller (Option)
- Wall Mount
- Power Supply
  - Power over Ethernet (Option)
  - Internal SMPS Power (Default)

Hardware Specification

AP-VWP100 IP Video Wall PAD

- Acoustic Echo Canceller (Option)
  - Full-duplex operation during double-talk situations
  - One channel AEC, one channel LEC up to 256ms shared
  - Cancels echoes with up to 10dB echo return
  - Advanced noise reduction(up to 20dB)
- Speaker
  - Impedance : 8 +-15%ohm at 1kHz, 1.0 Vrms
  - Sound Pressure : 90 +- 3dB at 0.1W/10 CM
    at 800Hz, 1.0kHz, 1.2kHz, 1.5kHz
  - Resonance Level : 550Hz +- 20%Hz at Fo Hz, 1.0Vrms
  - Frequency Range : Fo Hz ~20kHz
  - Input Power : Normal : 1.0 W, Max : 2.0W
- Audio Amplifier
  - 1-W BTL Output(5V, 0.11 % THD+N)
  - Uncompensated Gains of 2 to 20 (BTL Mode)
  - Thermal and Shot-circuit Protection
  - High Supply Ripple Rejection Ratio
- PoE(Power over Ethernet), Option
  - IEEE802.3af compliant
  - Input voltage range 36V to 57V
  - Short-circuit Protection

Hardware Specification

AP-VWP100 IP Video Wall PAD

- LCD Controller
  - One-Chip Solution for amorphous TFT-LCD
  - Support resolution up to 480xRGBx640
  - Built-in 172800 bytes internal RAM
  - 6,8,16, and 18-bit RGB Interface
  - Resize Function (x ½, x ¼)
  - On-Chip Power Management System

- Video Camera (Option)
  - High Sensitivity for low-light operation
  - Output support for Raw RGB, RGB, and YCrCb format
  - Image Size : VGA, QVGA, and any size scaling down from CIF to 40x30
  - Support AEC, AGC,AWB, ABF, ABLC
  - Saturation Level, Edge Enhancement Level, De-noise level Auto adjust

Hardware Specification

AP-VWP100 IP Video Wall PAD

Front Side



Hardware Specification

AP-VWP100 IP Video Wall PAD

Back Side

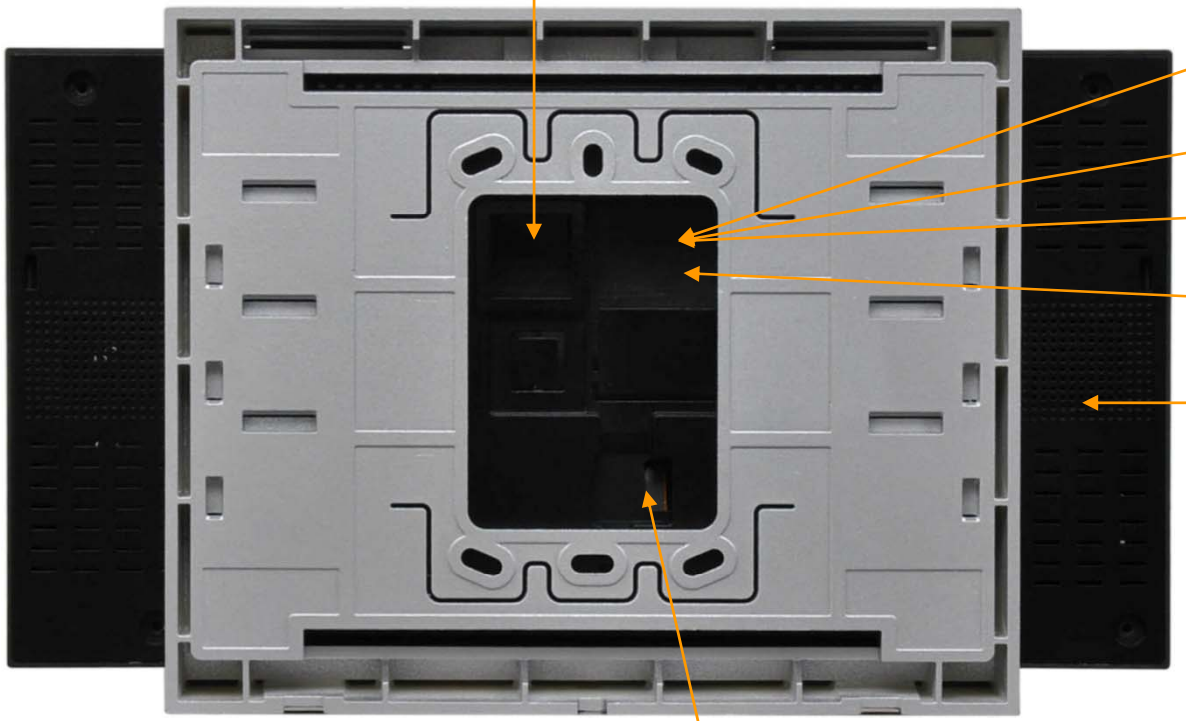

AP-VWP90
Smart IP Wall PAD

Product Overview

AP-VWP90 IP Video Wall PAD

- High Performance IP Video Wall PAD Solution
- TFT Color LCD, Touch Screen, Touch Sensor, Internal MIC & Speaker
- High Quality “7 Inch LCD, 800x480 Video Resolution
- SIP VoIP Signaling Stack Embedded (Optional H.323)
- High-performance Video/Voice Codec Support
  - H.264/MPEG4/H.263, G.711, etc
- One(1) 10/100Mbps Fast Ethernet
- High Quality Speaker Phone Features
- PSTN with CID Interface Support (Option)
- Power Acoustic Echo Canceller (Option)
- PoE(Power over Ethernet) or Internal SMPS Power Support (Option)
- Video Camera Sensor (Option)
- Powerful Network Protocols (PPPoE, DHCP, Static Routing, etc)
- Firmware Upgradeable Architecture
- Advanced Voice QoS Mechanism

Hardware Specification

AP-VWP90 IP Video Wall PAD

- RISC+DSP Microprocessor Computing Power
- Audio and Voice Interface
  - Internal MIC
  - Internal Speaker
- Video Camera Interface (Option)
- TFT Color LCD Interface with Touch Screen
  - 7 Inch LCD, 640 x 480, D1 Video Resolution
- Network Interface
  - One(1) 10/100Mbps Fast Ethernet
- PSTN Interface with CID (Caller ID Detection)
- Powerful Acoustic Echo Canceller (Option)
  - Half Duplex (Default)
  - Full Duplex, Powerful Acoustic Echo Canceller (Option)
- Wall Mount
- Power Supply
  - Power over Ethernet (Option)
  - Internal SMPS Power (Default)

Hardware Specification

AP-VWP90 IP Video Wall PAD

- Acoustic Echo Canceller (Option)
  - Full-duplex operation during double-talk situations
  - One channel AEC, one channel LEC up to 256ms shared
  - Cancels echoes with up to 10dB echo return
  - Advanced noise reduction(up to 20dB)
- Speaker
  - Impedance : 8 +-15%ohm at 1kHz, 1.0 Vrms
  - Sound Pressure : 90 +- 3dB at 0.1W/10 CM
    at 800Hz, 1.0kHz, 1.2kHz, 1.5kHz
  - Resonance Level : 550Hz +- 20%Hz at Fo Hz, 1.0Vrms
  - Frequency Range : Fo Hz ~20kHz
  - Input Power : Normal : 1.0 W, Max : 2.0W
- Audio Amplifier
  - 1-W BTL Output(5V, 0.11 % THD+N)
  - Uncompensated Gains of 2 to 20 (BTL Mode)
  - Thermal and Shot-circuit Protection
  - High Supply Ripple Rejection Ratio
- PoE(Power over Ethernet), Option
  - IEEE802.3af compliant
  - Input voltage range 36V to 57V
  - Short-circuit Protection

Hardware Specification

AP-VWP90 IP Video Wall PAD

- LCD Controller
  - One-Chip Solution for amorphous TFT-LCD
  - Support resolution up to 480xRGBx640
  - Built-in 172800 bytes internal RAM
  - 6,8,16, and 18-bit RGB Interface
  - Resize Function (x ½, x ¼)
  - On-Chip Power Management System

- Video Camera (Option)
  - High Sensitivity for low-light operation
  - Output support for Raw RGB, RGB, and YCrCb format
  - Image Size : VGA, QVGA, and any size scaling down from CIF to 40x30
  - Support AEC, AGC,AWB, ABF, ABLC
  - Saturation Level, Edge Enhancement Level, De-noise level Auto adjust

Hardware Specification

AP-VWP90 IP Video Wall PAD

Front Side

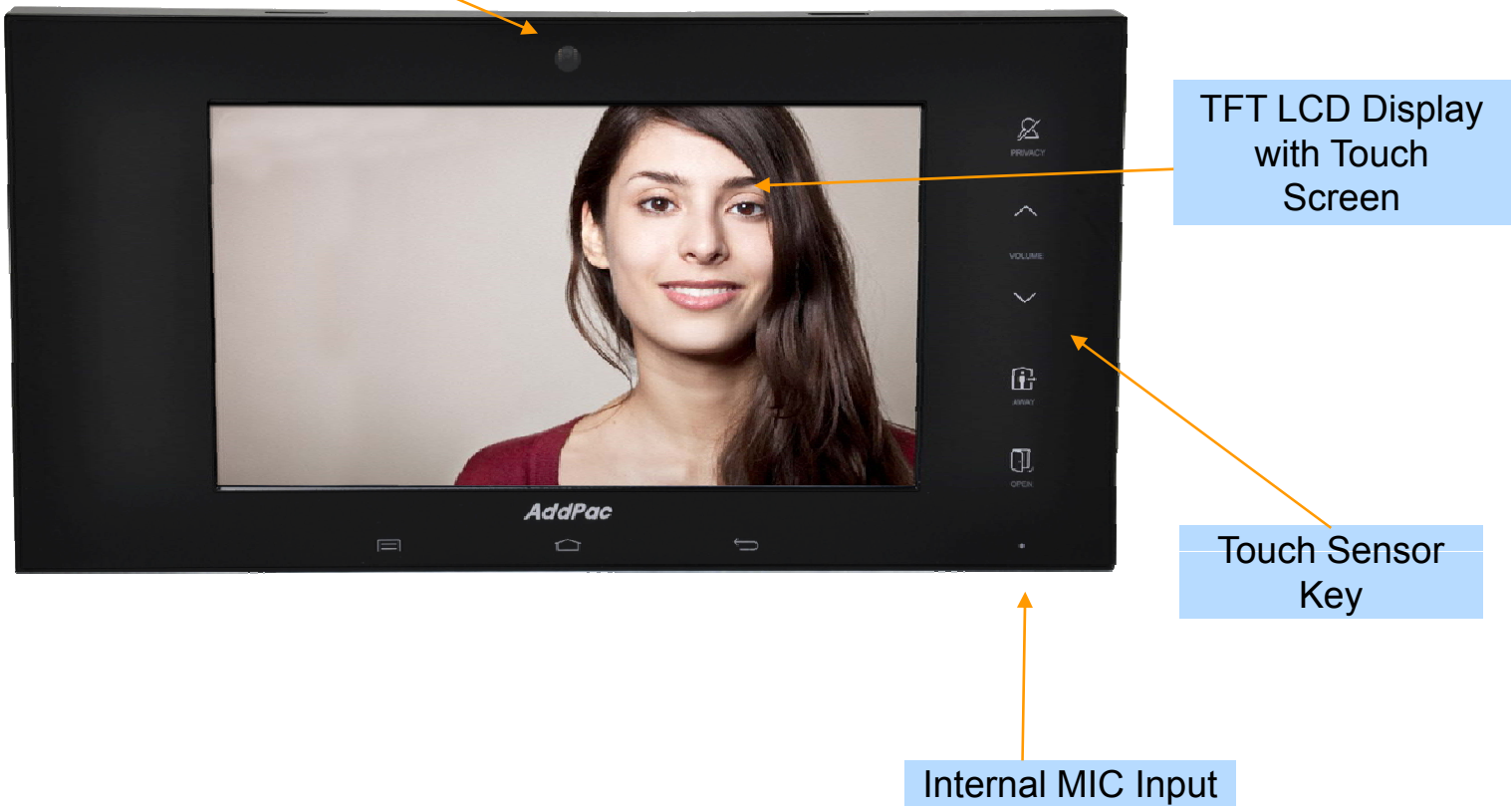

Hardware Specification

AP-VWP90 IP Video Wall PAD

Side View



Hardware Specification

AP-VWP90 IP Video Wall PAD

Back Side

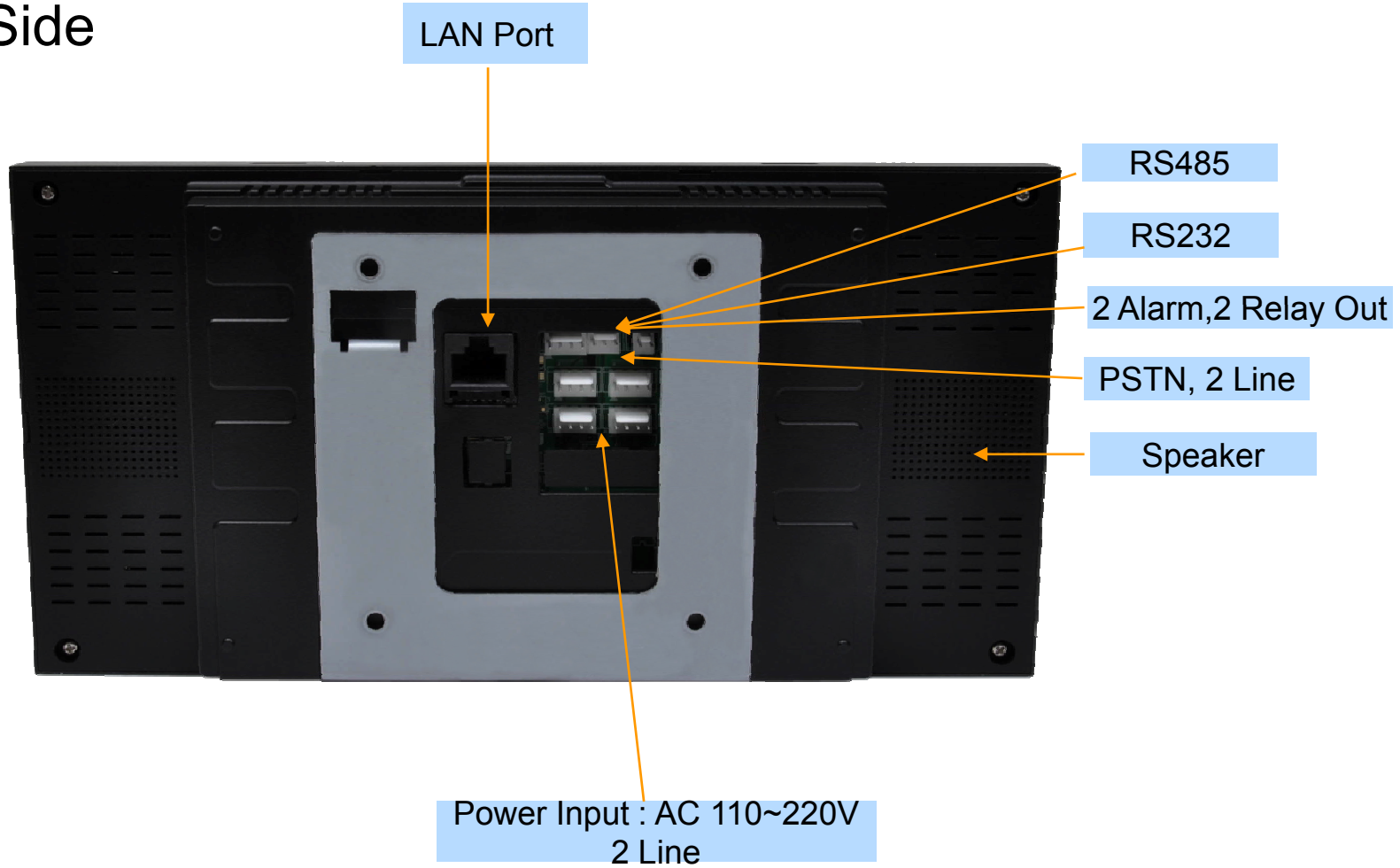

AP-VWP80
Smart IP Wall PAD

Product Overview

AP-VWP80 IP Video Wall PAD

- High Performance IP Video Wall PAD Solution
- TFT Color LCD, Touch Screen, Touch Sensor, Internal MIC & Speaker
- High Quality “7 Inch LCD, VGA(640x480) Video Resolution
- SIP VoIP Signaling Stack Embedded (Optional H.323)
- High-performance Video/Voice Codec Support
  - H.264/MPEG4/H.263, G.711, etc
- One(1) 10/100Mbps Fast Ethernet
- High Quality Speaker Phone Features
- PSTN with CID Interface Support (Option)
- Power Acoustic Echo Canceller (Option)
- PoE(Power over Ethernet) or Internal SMPS Power Support (Option)
- Video Camera Sensor (Option)
- Powerful Network Protocols (PPPoE, DHCP, Static Routing, etc)
- Interworking with Smart Hub for Sensor Devices
- Firmware Upgradeable Architecture
- Advanced Voice QoS Mechanism

Hardware Specification

AP-VWP80 IP Video Wall PAD

- RISC+DSP Microprocessor Computing Power
- Audio and Voice Interface
  - Internal MIC
  - Internal Speaker
- Video Camera Interface (Option)
- TFT Color LCD Interface with Touch Screen
  - 7 Inch LCD, 640 x 480, D1 Video Resolution
- Network Interface
  - One(1) 10/100Mbps Fast Ethernet
- PSTN Interface with CID (Caller ID Detection)
- Powerful Acoustic Echo Canceller (Option)
  - Half Duplex (Default)
  - Full Duplex, Powerful Acoustic Echo Canceller (Option)
- Wall Mount
- Power Supply
  - Power over Ethernet (Option)
  - Internal SMPS Power (Default)

Hardware Specification

AP-VWP80 IP Video Wall PAD

- Acoustic Echo Canceller (Option)
  - Full-duplex operation during double-talk situations
  - One channel AEC, one channel LEC up to 256ms shared
  - Cancels echoes with up to 10dB echo return
  - Advanced noise reduction(up to 20dB)
- Speaker
  - Impedance : 8 +-15%ohm at 1kHz, 1.0 Vrms
  - Sound Pressure : 90 +- 3dB at 0.1W/10 CM
    at 800Hz, 1.0kHz, 1.2kHz, 1.5kHz
  - Resonance Level : 550Hz +- 20%Hz at Fo Hz, 1.0Vrms
  - Frequency Range : Fo Hz ~20kHz
  - Input Power : Normal : 1.0 W, Max : 2.0W
- Audio Amplifier
  - 1-W BTL Output(5V, 0.11 % THD+N)
  - Uncompensated Gains of 2 to 20 (BTL Mode)
  - Thermal and Shot-circuit Protection
  - High Supply Ripple Rejection Ratio
- PoE(Power over Ethernet), Option
  - IEEE802.3af compliant
  - Input voltage range 36V to 57V
  - Short-circuit Protection

Hardware Specification

AP-VWP80 IP Video Wall PAD

- LCD Controller
  - One-Chip Solution for amorphous TFT-LCD
  - Support resolution up to 480xRGBx640
  - Built-in 172800 bytes internal RAM
  - 6,8,16, and 18-bit RGB Interface
  - Resize Function (x ½, x ¼)
  - On-Chip Power Management System

- Video Camera (Option)
  - High Sensitivity for low-light operation
  - Output support for Raw RGB, RGB, and YCrCb format
  - Image Size : VGA, QVGA, and any size scaling down from CIF to 40x30
  - Support AEC, AGC,AWB, ABF, ABLC
  - Saturation Level, Edge Enhancement Level, De-noise level Auto adjust

Hardware Specification

AP-VWP80 IP Video Wall PAD

Front Side

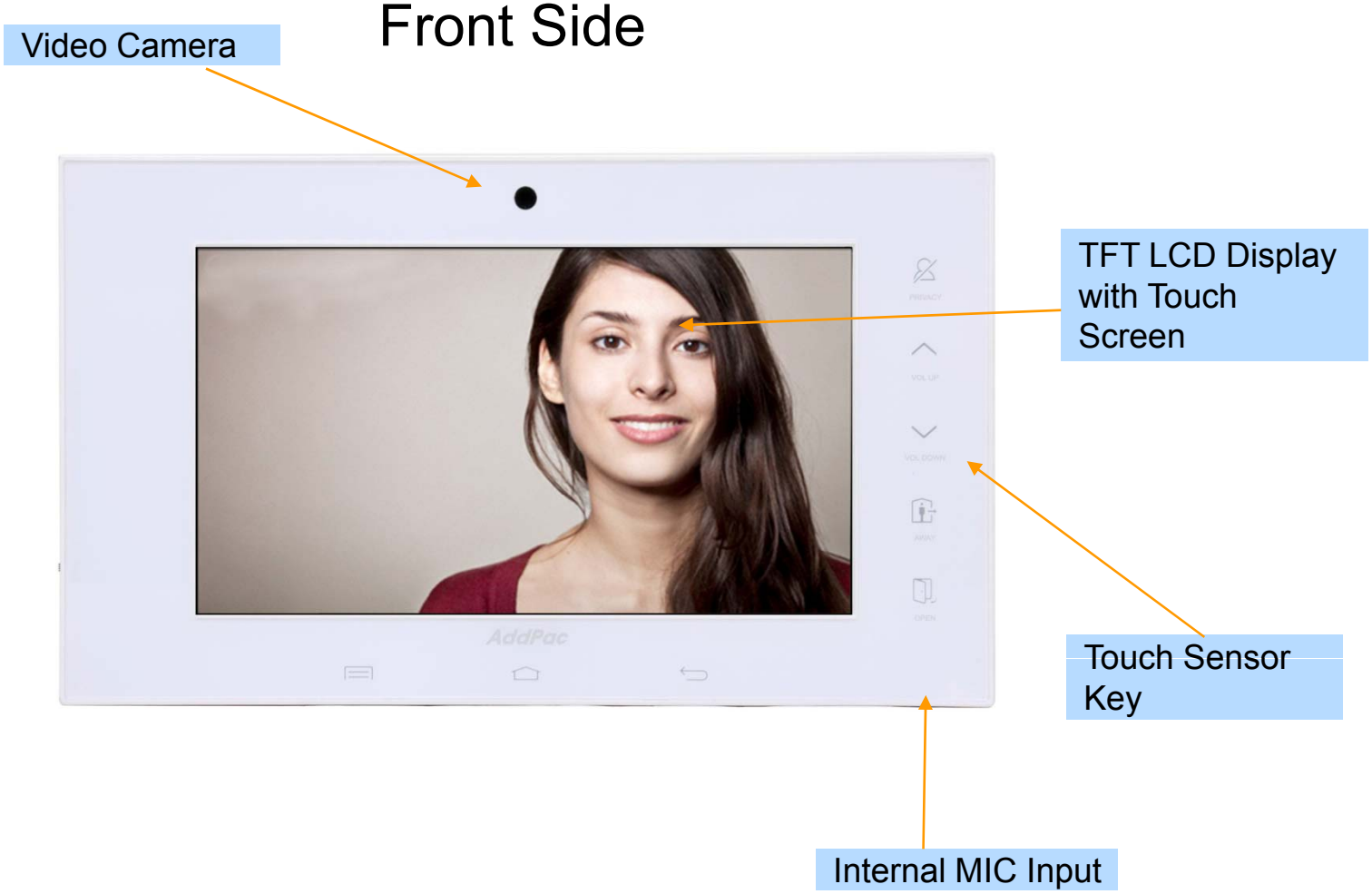

Hardware Specification

AP-VWP80 IP Video Wall PAD

Back Side

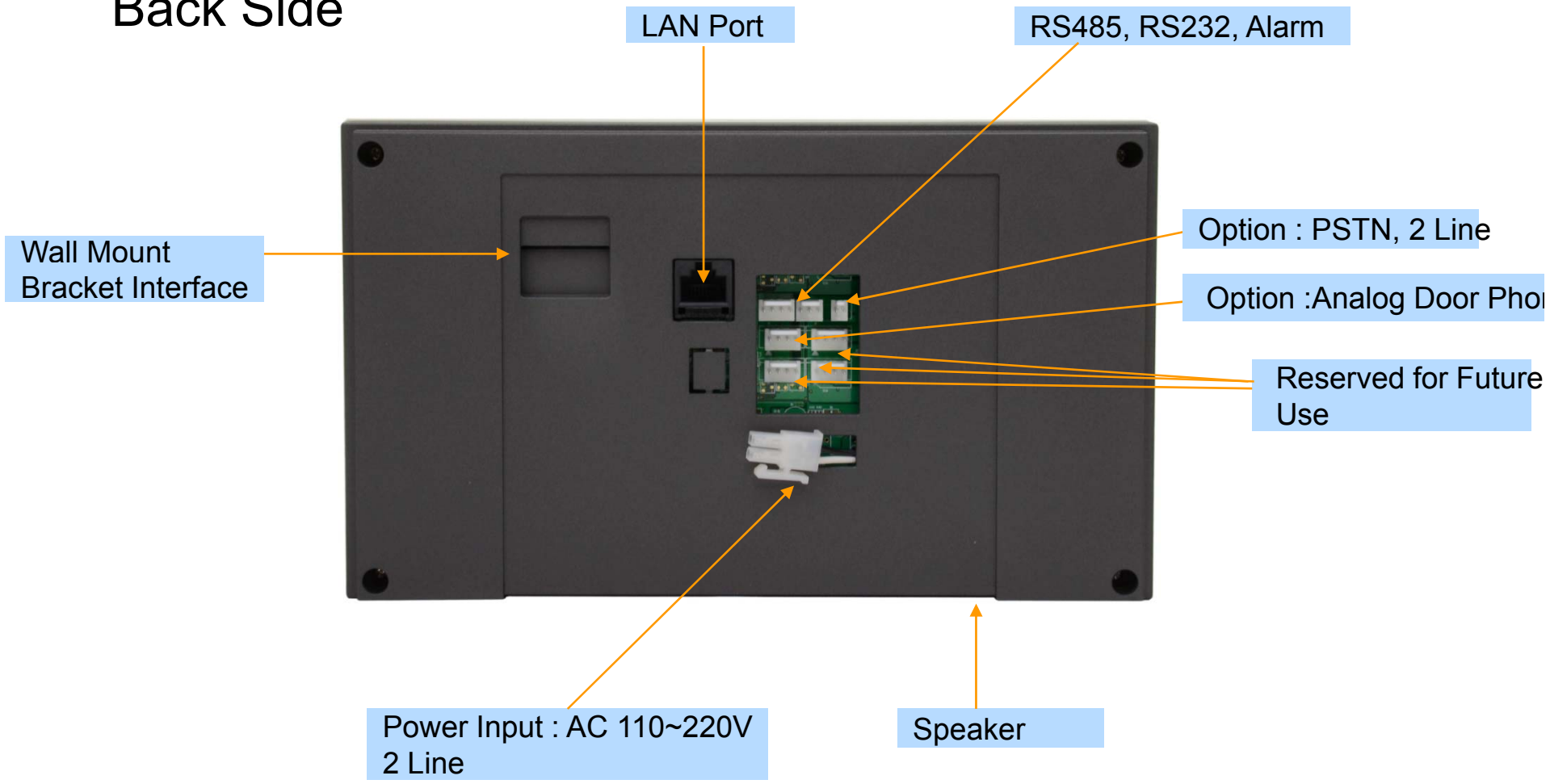

Touch Screen SIP Video Door Phones

Touch Screen IP Video Door Phone Comparison Table

Model Service Features	AP-VAC150 	AP-VAC80 
Duplex (Voice)	Full Duplex	Full Duplex
Key Pad	Touch Screen based Key Support	Touch Screen based Key Support
LCD	5 Inch LCD	5 inch LCD
RF Card	Support	Support
Fingerprint	Support	N/A
Video Camera	SD (CMOS Sensor)	SD (CMOS Sensor)
Video Codec	H.264/MPEG4	H.264/MPEG4
Voice Codec	G.711	G.711
Signaling	H.323/SIP	H.323/SIP
MIC & Speaker Phone	Support	Support
LAN Port	1	1
PoE(Option)	Support	Support

AP-VAC150
Touch Screen IP Video Door Phone

Main Features

AP-VAC150 Fingerprint Recognition IP Video Door Phone

- High Performance IP Video Door Phone Solution
- Video Camera, Touch Screen TFT Color LCD, Internal MIC & Speaker
- High Quality 5 Inch LCD, 800 x 480 Video Resolution
- Fingerprint Recognition Support
- RF Card Support
- SIP VoIP Signaling Stack Embedded
- High-performance Video/Voice Codec Support
  - H.264/MPEG4, G.711, etc
- One(1) 10/100Mbps Fast Ethernet
- PoE(Power over Ethernet) Support
- High Quality Speaker Phone Features
- Powerful Acoustic Echo Canceller Chip Embedded
- Powerful Network Protocols (PPPoE, DHCP, Static Routing, etc)
- Firmware Upgradeable Architecture
- Advanced Voice QoS Mechanism

Hardware Specification

AP-VAC150 Fingerprint Recognition HD IP Video Door Phone

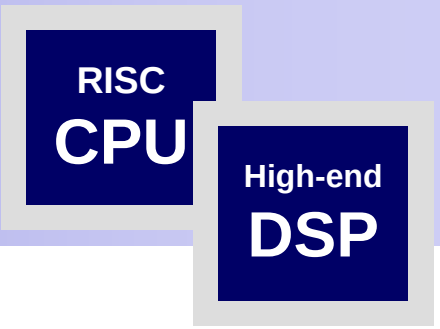

- RISC+DSP Microprocessor Computing Power
- Audio and Voice Interface
  - Internal MIC
  - Internal Speaker
- Video Camera Interface
- Touch Screen TFT Color LCD Interface
  - 5 Inch LCD, 800 x 480 Video Resolution
- Network Interface
  - One(1) 10/100Mbps Fast Ethernet
- Fingerprint Recognition Interface
- RF Card Interface
- Alarm & Relay Out Interface (door open, etc)
- RS232/RS485 Interface
- Power Supply
  - Power over Ethernet (Option)
  - External Power Supply

Hardware Specification

AP-VAC150 Fingerprint Recognition IP Video Door Phone

RISC CPU

High-end DSP

Front Side



Hardware Specification

AP-VAC150 Fingerprint Recognition HD IP Video Door Phone

RISC CPU

High-end DSP

Back Side

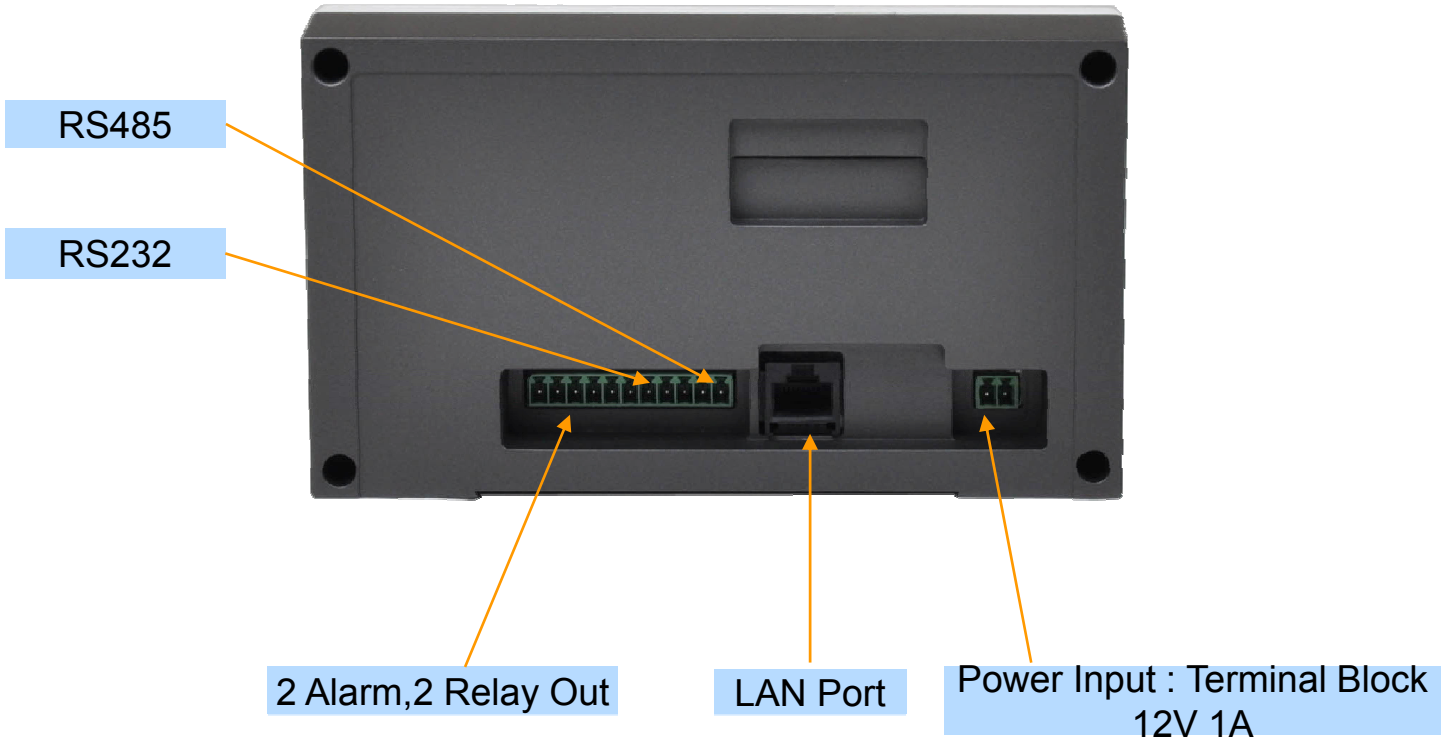

AP-VAC80
IP Video Door Phone

Main Features

AP-VAC80 IP Video Door Phone

- High Performance IP Video Door Phone Solution
- Video Camera, Touch Screen TFT Color LCD, Internal MIC & Speaker
- High Quality 5 Inch LCD, 800 x 480 Video Resolution
- SIP VoIP Signaling Stack Embedded
- High-performance Video/Voice Codec Support
  - H.264/MPEG4, G.711, etc
- One(1) 10/100Mbps Fast Ethernet
- PoE(Power over Ethernet) Support
- High Quality Speaker Phone Features
- Powerful Acoustic Echo Canceller Chip Embedded
- Powerful Network Protocols (PPPoE, DHCP, Static Routing, etc)
- Firmware Upgradeable Architecture
- Advanced Voice QoS Mechanism

Hardware Specification

AP-VAC80 IP Video Door Phone

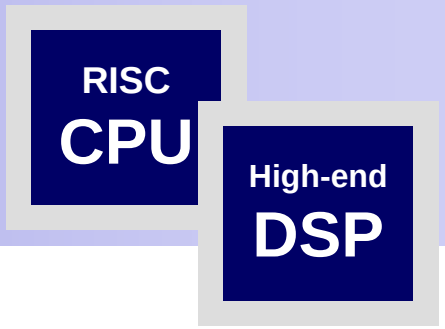

- RISC+DSP Microprocessor Computing Power
- Audio and Voice Interface
  - Internal MIC
  - Internal Speaker
- Video Camera Interface
- TFT Color LCD Interface
  - 5 Inch LCD, 800 x 480 Video Resolution
- Network Interface
  - One(1) 10/100Mbps Fast Ethernet
- RF Card Interface
- Alarm & Relay Out Interface (door open, etc)
- RS232/RS485 Interface
- Power Supply
  - Power over Ethernet (Option)
  - External Power Supply

Hardware Specification

AP-VAC80 IP Video Door Phone

RISC CPU

High-end DSP

Front Side

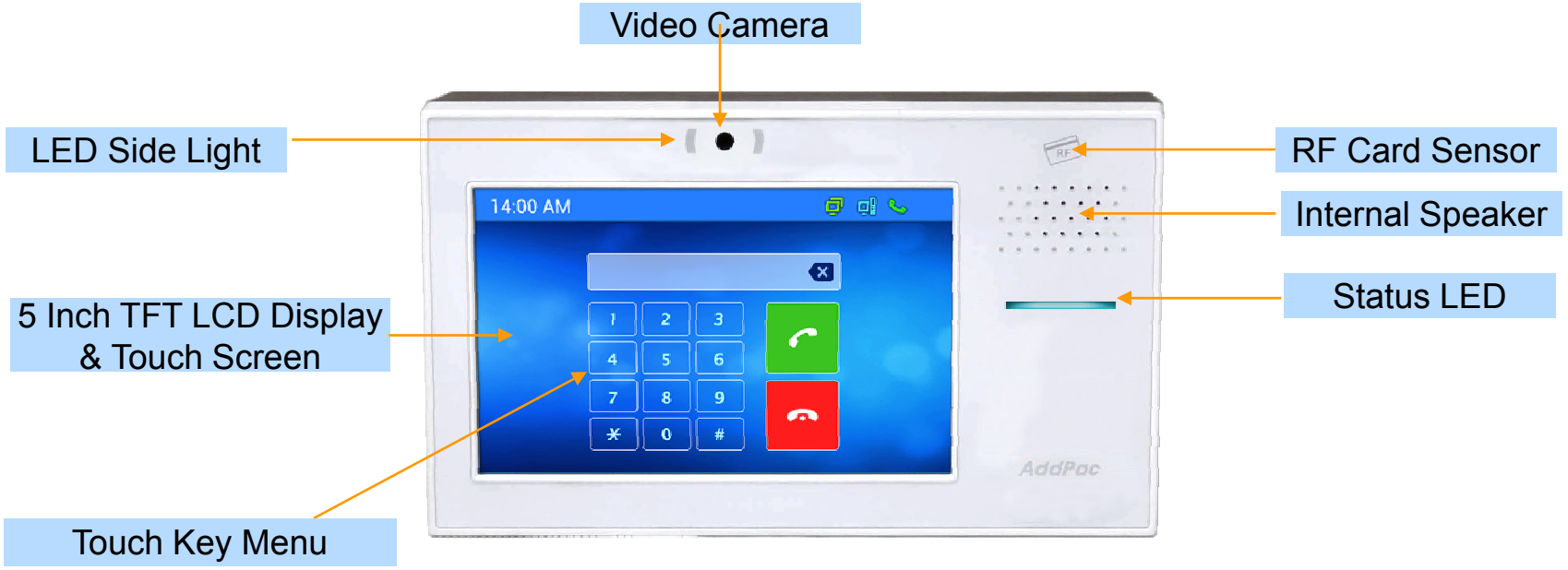

Hardware Specification

AP-VAC80 IP Video Door Phone

RISC CPU

High-end DSP

Back Side

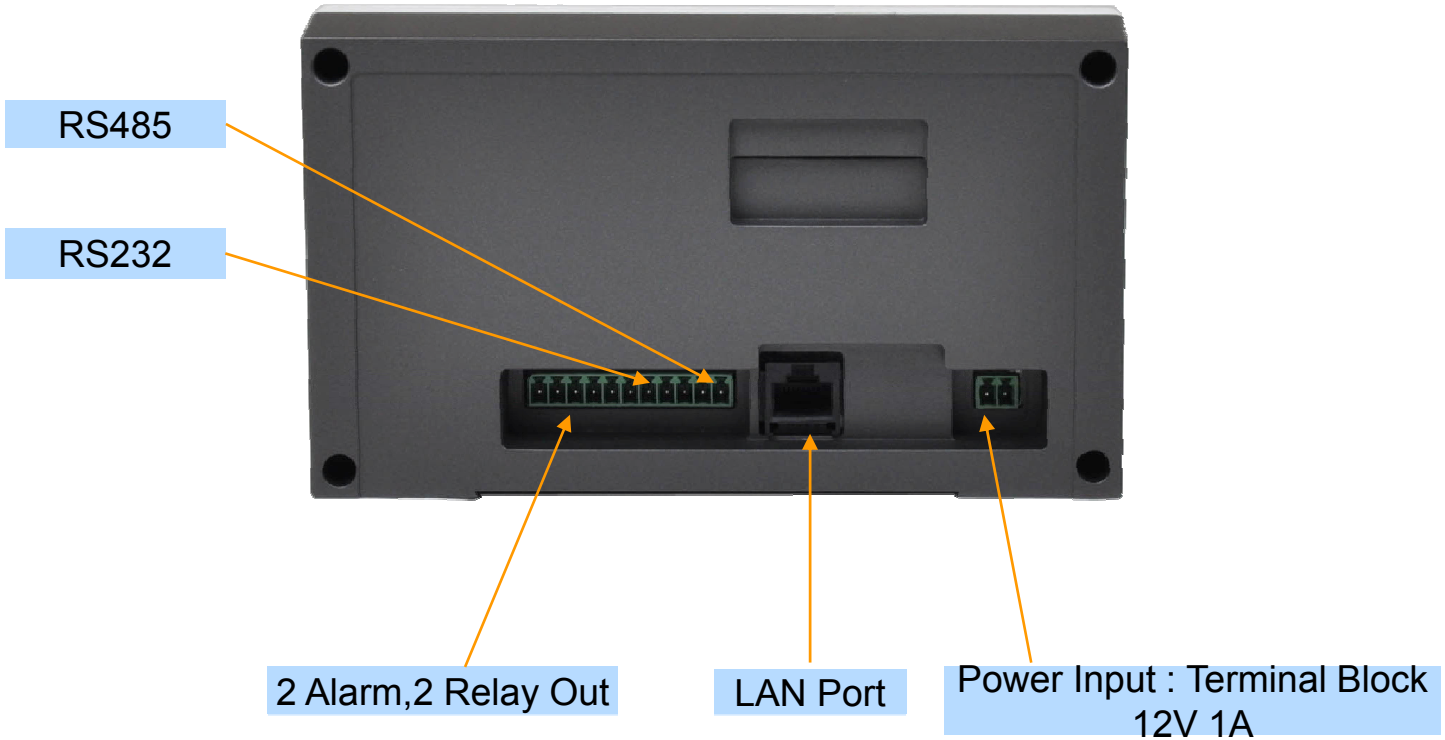

Analog Video Door Phones

Model Service Features	AP-VAC20A 	AP-VAC50A 
Call Button	Touch Type Key Support with indication lamp	Push Type Key Support with indication lamp
Video Camera	SD Analog Video Camera	SD Analog Video Camera
Camera Backlight	Support	Support
MIC & Speaker Phone	Support	Support
Line Wiring	Four(4) Line	Four(4) Line
Power	Power Feeding From External Wall PAD or Intercom Device	Power Feeding From External Wall PAD or Intercom Device

AP-VAC20A
Analog Video Door Phone

Product Overview

AP-VAC20A Analog Video Door Phone

- Analog Video Door Phone Solution
- High Quality Video Camera
- One(1) Touch Call Button (Back Light Support)
- Internal MIC & Speaker
- Power Feeding from External Analog Video Door Intercom
- Four(4) Line Wiring : +12V, Video, Voice, GND



Hardware Specification

AP-VAC20A Analog Video Door Phone

- MICOM Computing Power
- Audio and Voice Interface
  - Internal MIC
  - Internal Speaker
- Video Camera Interface (CVBS)
- One(1) Touch Call Button (Back Light)
- Power Supply
  - +12V Power Feeding from External Analog Video Door Intercom

Hardware Specification

AP-VAC20A Analog Video Door Phone

Front Side

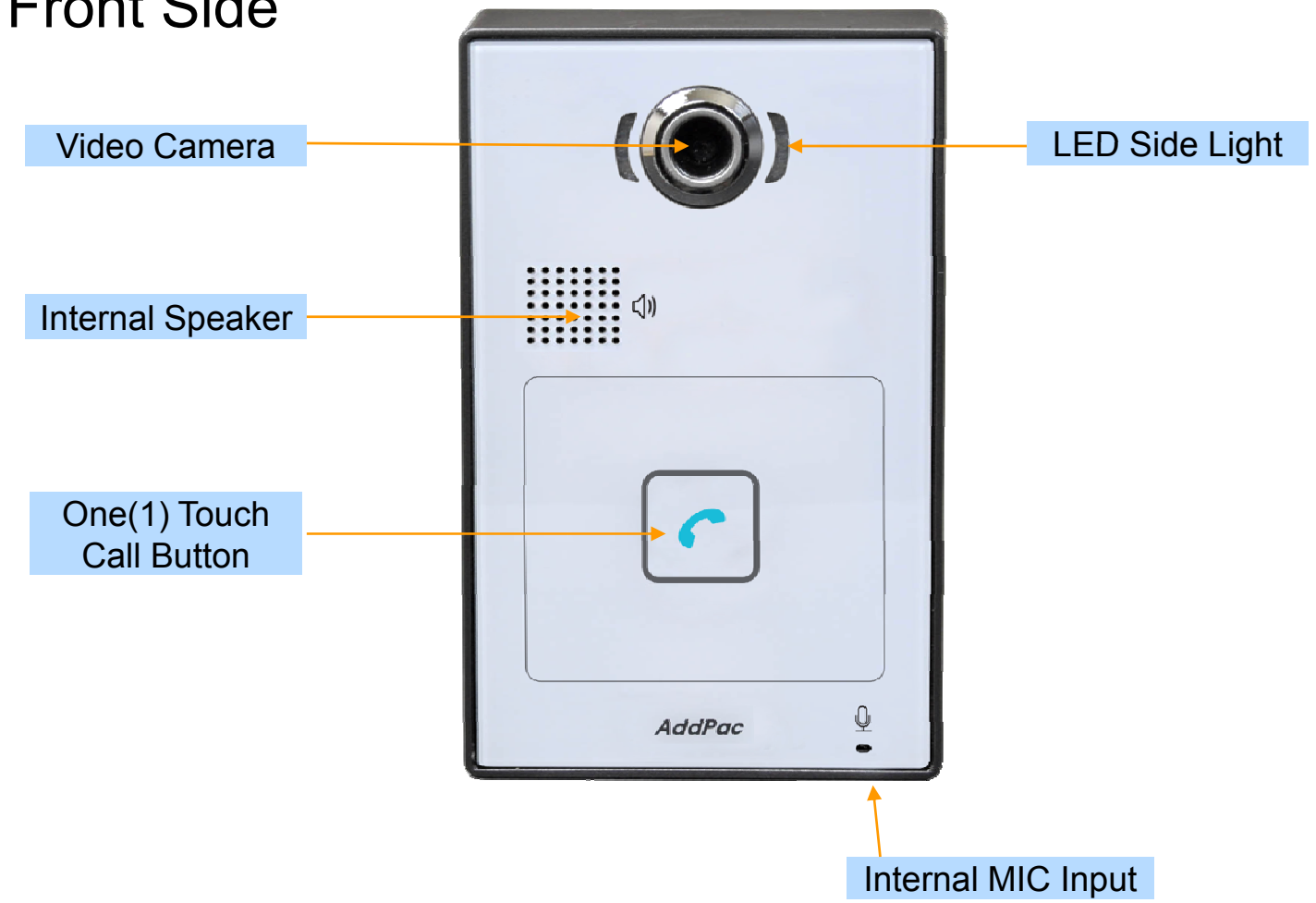

Point-to-Point Connection (Simple Appl.)

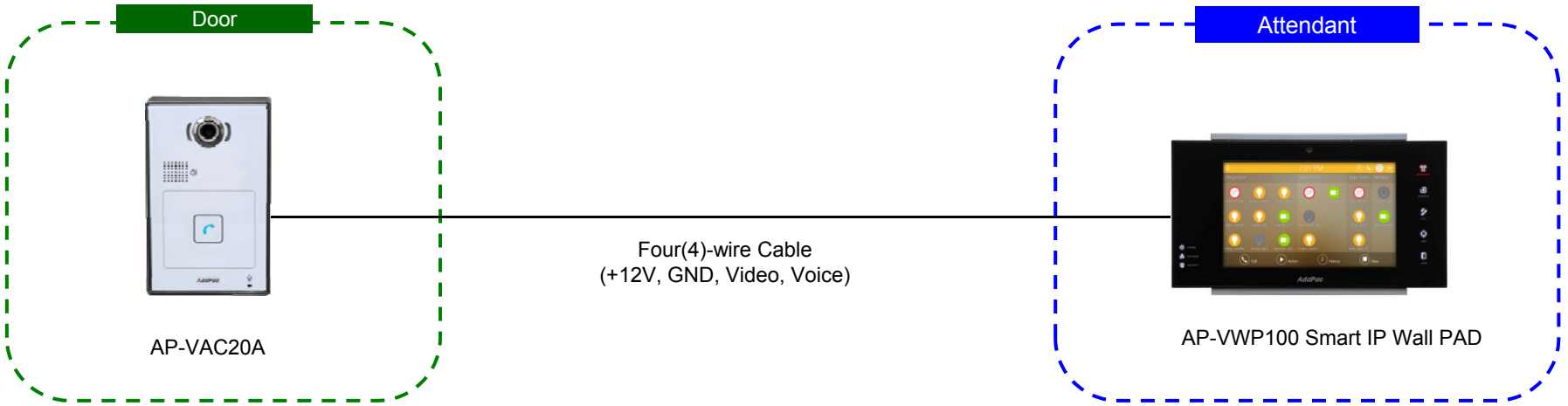

AP-VAC50A
Analog Video Door Phone

Product Overview

AP-VAC50A Analog Video Door Phone

- Analog Video Door Phone Solution
- High Quality Analog Video Camera
- One(1) Call Button with Indication Lamp
- Internal MIC & Speaker
- Power Feeding from External AddPac Wall PAD
- Four(4) Line Wiring : +12V, Video, Voice, GND

Hardware Specification

AP-VAC50A Analog Video Door Phone

- Audio and Voice Interface
  - Internal MIC
  - Internal Speaker
- Video Camera Interface (CVBS)
- One(1) Call Button with Indication LAMP
- Power Supply
  - +12V Power Feeding from External AddPac Wall PAD

Hardware Specification

AP-VAC50A Analog Video Door Phone

Front Side

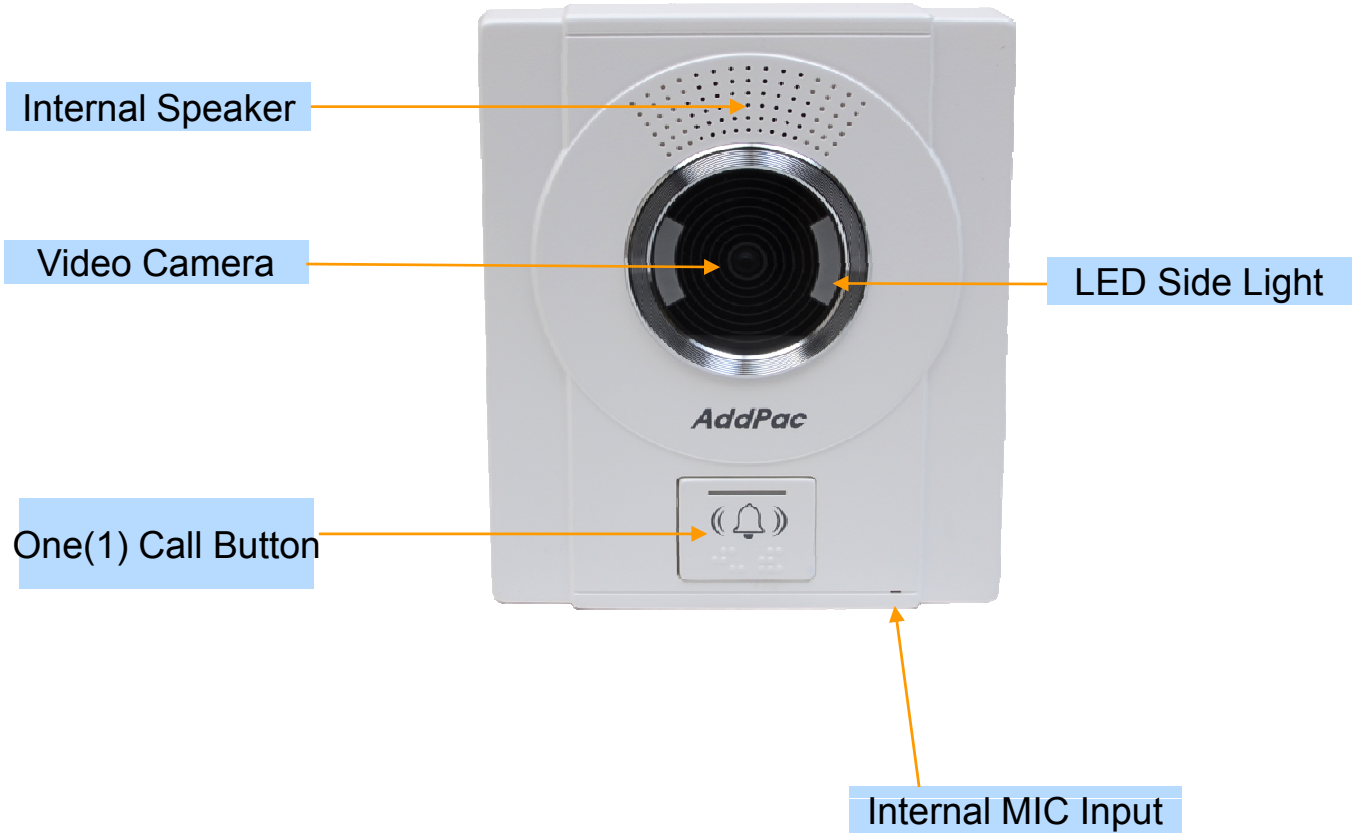

Point -to-Point Application (Office)

AP-VAC50A Analog Video Door Phone

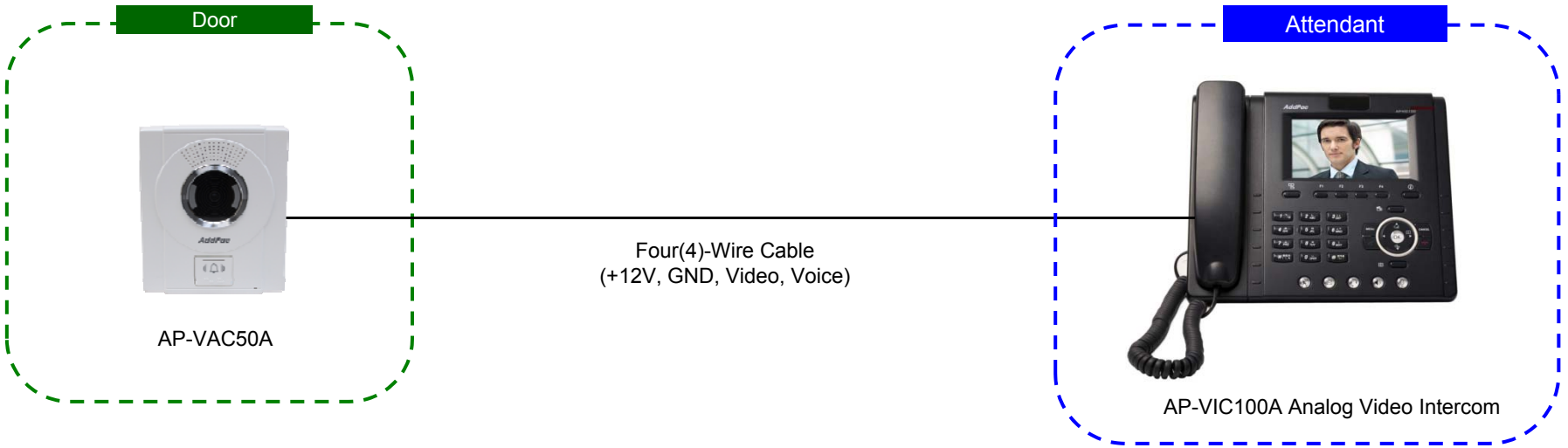

Point -to-Point Application (Home)

AP-VAC50A Analog Video Door Phone

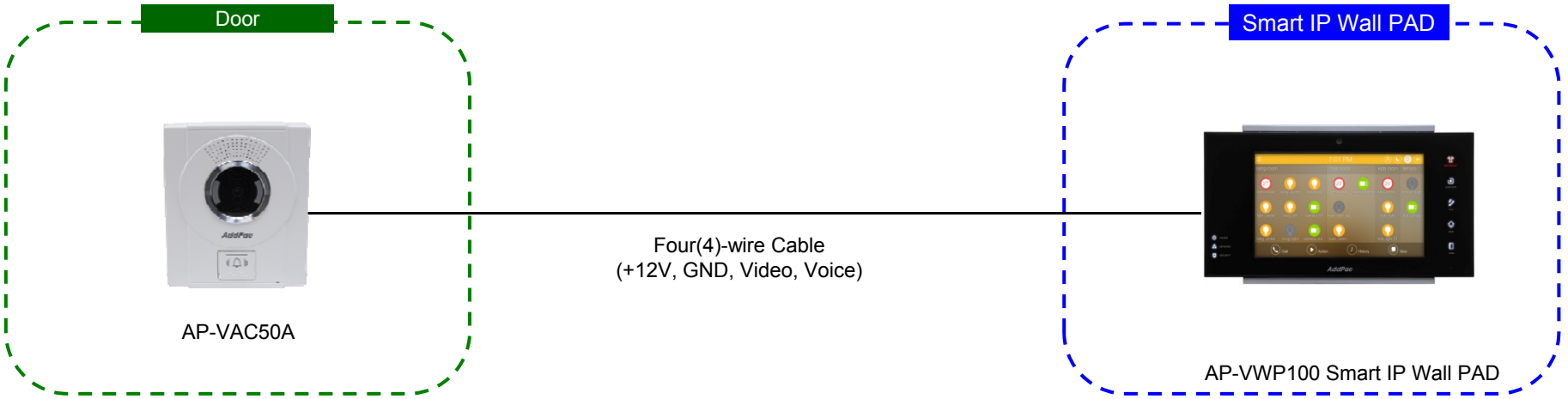

Smart Home Application

AP-VAC50A Analog Video Door Phone

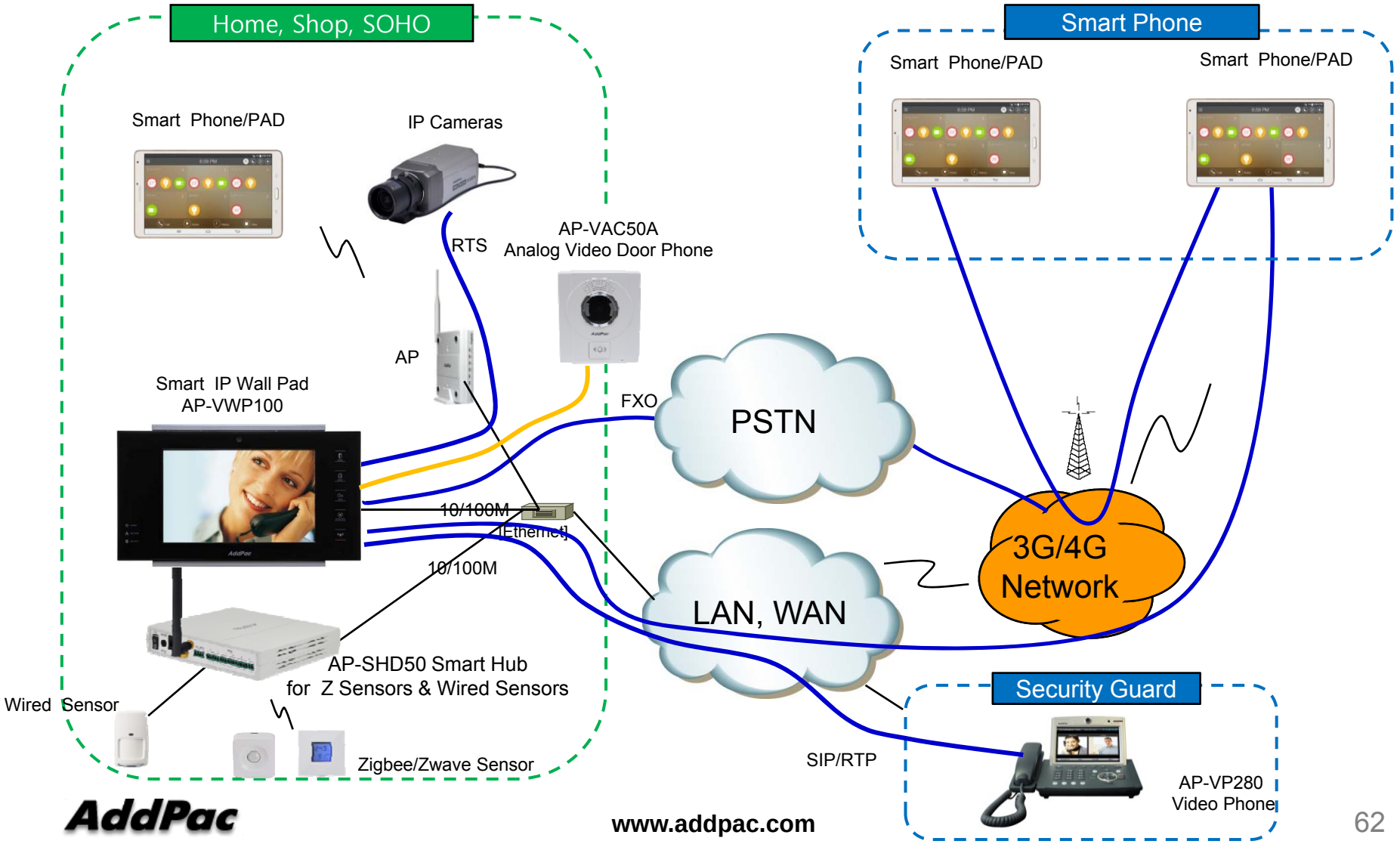

SIP Video Lobby Phones

IP Video Door Phone Comparison Table

Model Service Features	AP-VAC200 	AP-VAC100 
Duplex (Voice)	Full Duplex	Full Duplex
Key Pad	3x4 Key Support	3x4 Key Support
LCD	3.5 Inch	3.5 Inch
RF Card	Support	Support
Fingerprint	N/A	N/A
Video Codec	H.264/MPEG4	H.264/MPEG4
Voice Codec	G.711	G.711
Signaling	H.323/SIP	H.323/SIP
MIC & Speaker Phone	Support	Support
LAN Port	1	1
PoE(Option)	Support	Support

AP-VAC200
IP Video Door Phone
for Lobby Access

Product Overview

AP-VAC200 Fingerprint Recognition IP Video Door Phone

- High Performance IP Video Door Phone Solution
- Video Camera, 3x4 Key, TFT Color LCD, Internal MIC & Speaker
- High Quality 3.5 Inch LCD, 320 x 240 Video Resolution
- Fingerprint Recognition Support
- RF Card Support
- SIP VoIP Signaling Stack Embedded
- High-performance Video/Voice Codec Support
  - H.264/MPEG4, G.711, etc
- One(1) 10/100Mbps Fast Ethernet
- PoE(Power over Ethernet) Support
- High Quality Speaker Phone Features
- Powerful Acoustic Echo Canceller Chip Embedded
- Powerful Network Protocols (PPPoE, DHCP, Static Routing, etc)
- Firmware Upgradeable Architecture
- Advanced Voice QoS Mechanism

Hardware Specification

AP-VAC200 Fingerprint Recognition IP Video Door Phone

RISC CPU

High-end DSP

- RISC+DSP Microprocessor Computing Power
- Audio and Voice Interface
  - Internal MIC
  - Internal Speaker
  - 3 x 4 key PAD
- Video Camera Interface
- TFT Color LCD Interface
  - 3.5 Inch LCD, 320 x 240 Video Resolution
- Network Interface
  - One(1) 10/100Mbps Fast Ethernet
- Fingerprint Recognition Interface
- RF Card Interface
- Alarm & Relay Out Interface (door open, etc)
- RS232/RS485 Interface
- External RCA Audio Line Out and MIC In (back side)
- Steel Chassis
- Power Supply
  - Power over Ethernet (Option)
  - External Power Supply



Hardware Specification

AP-VAC200 Fingerprint Recognition IP Video Door Phone

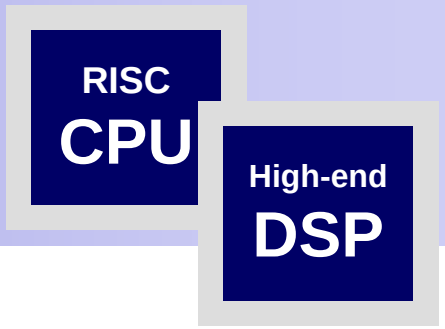

- Acoustic Echo Canceller
  - Full-duplex operation during double-talk situations
  - One channel AEC, one channel LEC up to 256ms shared
  - Cancels echoes with up to 10dB echo return
  - Advanced noise reduction(up to 20dB)
- Speaker
  - Impedance : 8 +-15%ohm at 1kHz, 1.0 Vrms
  - Sound Pressure : 90 +- 3dB at 0.1W/10 CM
    at 800Hz, 1.0kHz, 1.2kHz, 1.5kHz
  - Resonance Level : 550Hz +- 20%Hz at Fo Hz, 1.0Vrms
  - Frequency Range : Fo Hz ~20kHz
  - Input Power : Normal : 1.0 W, Max : 2.0W
- Audio Amplifier
  - 1-W BTL Output(5V, 0.11 % THD+N)
  - Uncompensated Gains of 2 to 20 (BTL Mode)
  - Thermal and Shot-circuit Protection
  - High Supply Ripple Rejection Ratio
- PoE(Power over Ethernet)
  - IEEE802.3af compliant
  - Input voltage range 36V to 57V
  - Short-circuit Protection

Hardware Specification

AP-VAC200 Fingerprint Recognition IP Video Door Phone

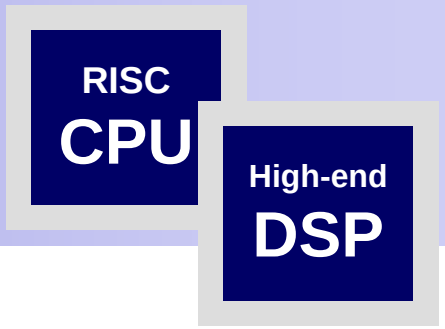

- LCD Controller
  - One-Chip Solution for amorphous TFT-LCD
  - Support resolution up to 240xRGBx320
  - Built-in 172800 bytes internal RAM
  - 6,8,16, and 18-bit RGB Interface
  - Resize Function (x ½, x ¼)
  - On-Chip Power Management System

- Camera
  - High Sensitivity for low-light operation
  - Output support for Raw RGB, RGB, and YCrCb format
  - Image Size : VGA, QVGA, and any size scaling down from CIF to 40x30
  - Support AEC, AGC,AWB, ABF, ABLC
  - Saturation Level, Edge Enhancement Level, De-noise level Auto adjust

Hardware Specification

AP-VAC200 Fingerprint Recognition IP Video Door Phone

RISC CPU

High-end DSP

- RF Card Sensor
  - Protocol Supported
    - ISO14443A/B all bit rates
    - > 106,212,424 and 848 kbps
    - Compatible to MiFare Classic
    - ISO15693 all modes
    - > 1.65/6.6 & 26.5 kbps
    - > Uplink 1 & 2 sub-carrier
  - Receiver
    - Rx Sensitivity down to 1mVrms
    - Rx Automatic Gain Control
    - Accept external baseband signal from external circuitry for frame level processing
    - Integrated signal strength indicator (SSI)
    - On-Chip Framing handler for supported standard
  - Transmitter
    - Typical proximity operating distance up to 100mm.
    - Software configurable modulation index
    - Maximum driving current up to 200 mA/PIN @ 5V
    - Accept external baseband signal for RF modulation
    - Wide Transmitter driver supply range from 2.7~7.0V



Hardware Specification

AP-VAC200 Fingerprint Recognition IP Video Door Phone

RISC CPU

High-end DSP

Front Side



- Internal Speaker
- Video Camera
- LED Side Light
- RF Card Sensor
- Status LED
- Fingerprint Recognition
- TFT LCD Display
- Remote Image
- Local Image
- 3 x 4 Dial Key
- Steel Chassis
- Internal MIC Input

Hardware Specification

AP-VAC200 Fingerprint Recognition IP Video Door Phone

RISC CPU

High-end DSP

Back Side

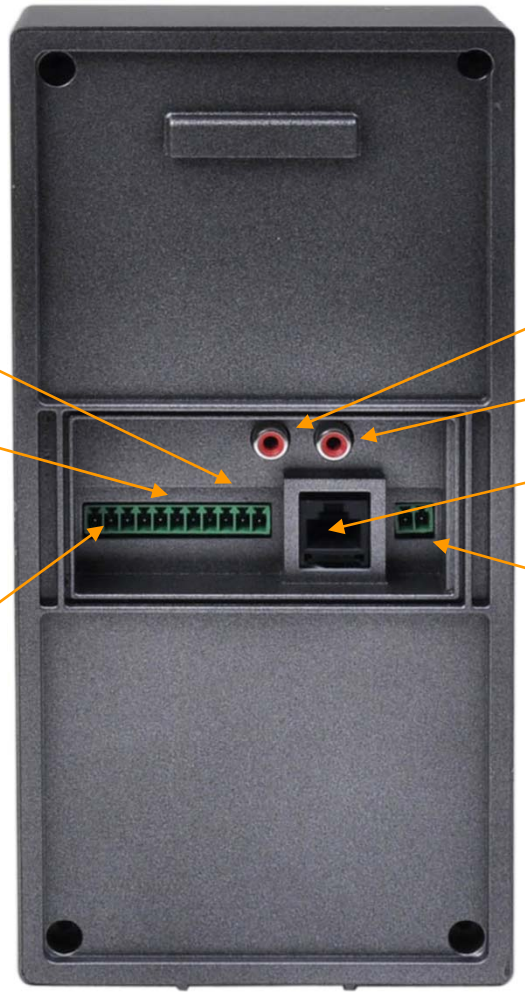

RS485

RS232

2 Alarm,2 Relay Out

Option : Line Out

Option : MIC In

LAN Port

Power Input : Terminal Block
12V 1A

AP-VAC100
IP Video Door Phone
for Lobby Access

Product Overview

AP-VAC100 IP Video Door Phone

- High Performance IP Video Door Phone Solution
- Video Camera, 3x4 Key, TFT Color LCD, Internal MIC & Speaker
- High Quality 3.5 Inch LCD, 320 x 240 Video Resolution
- RF Card Support
- SIP VoIP Signaling Stack Embedded
- High-performance Video/Voice Codec Support
  - H.264/MPEG4, G.711, etc
- One(1) 10/100Mbps Fast Ethernet
- PoE(Power over Ethernet) Support
- High Quality Speaker Phone Features
- Powerful Acoustic Echo Canceller Chip Embedded
- Powerful Network Protocols (PPPoE, DHCP, Static Routing, etc)
- Firmware Upgradeable Architecture
- Advanced Voice QoS Mechanism

Hardware Specification

AP-VAC100 IP Video Door Phone

RISC CPU

High-end DSP

- RISC+DSP Microprocessor Computing Power
- Audio and Voice Interface
  - Internal MIC
  - Internal Speaker
  - 3 x 4 key PAD
- Video Camera Interface
- TFT Color LCD Interface
  - 3.5 Inch LCD, 320 x 240 Video Resolution
- Network Interface
  - One(1) 10/100Mbps Fast Ethernet
- RF Card Interface
- Alarm & Relay Out Interface (door open, etc)
- RS232/RS485 Interface
- External RCA Audio Line Out and MIC In (back side)
- Steel Chassis
- Power Supply
  - Power over Ethernet (Option)
  - External Power Supply



Hardware Specification

AP-VAC100 IP Video Door Phone

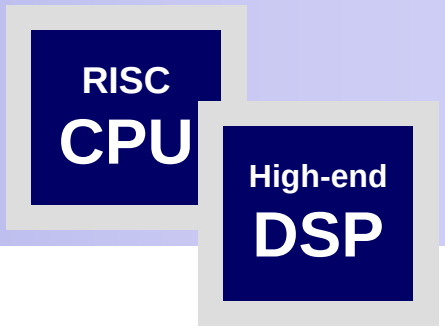

- Acoustic Echo Canceller
  - Full-duplex operation during double-talk situations
  - One channel AEC, one channel LEC up to 256ms shared
  - Cancels echoes with up to 10dB echo return
  - Advanced noise reduction(up to 20dB)
- Speaker
  - Impedance : 8 +-15%ohm at 1kHz, 1.0 Vrms
  - Sound Pressure : 90 +- 3dB at 0.1W/10 CM
    at 800Hz, 1.0kHz, 1.2kHz, 1.5kHz
  - Resonance Level : 550Hz +- 20%Hz at Fo Hz, 1.0Vrms
  - Frequency Range : Fo Hz ~20kHz
  - Input Power : Normal : 1.0 W, Max : 2.0W
- Audio Amplifier
  - 1-W BTL Output(5V, 0.11 % THD+N)
  - Uncompensated Gains of 2 to 20 (BTL Mode)
  - Thermal and Shot-circuit Protection
  - High Supply Ripple Rejection Ratio
- PoE(Power over Ethernet)
  - IEEE802.3af compliant
  - Input voltage range 36V to 57V
  - Short-circuit Protection

Hardware Specification

AP-VAC100 IP Video Door Phone

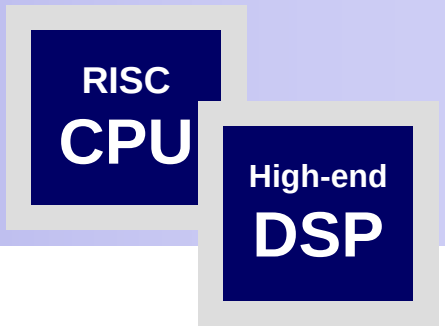

- LCD Controller
  - One-Chip Solution for amorphous TFT-LCD
  - Support resolution up to 240xRGBx320
  - Built-in 172800 bytes internal RAM
  - 6,8,16, and 18-bit RGB Interface
  - Resize Function (x ½, x ¼)
  - On-Chip Power Management System

- Camera
  - High Sensitivity for low-light operation
  - Output support for Raw RGB, RGB, and YCrCb format
  - Image Size : VGA, QVGA, and any size scaling down from CIF to 40x30
  - Support AEC, AGC,AWB, ABF, ABLC
  - Saturation Level, Edge Enhancement Level, De-noise level Auto adjust

Hardware Specification

AP-VAC100 IP Video Door Phone

RISC CPU

High-end DSP

- RF Card Sensor
  - Protocol Supported
    - ISO14443A/B all bit rates
    - > 106,212,424 and 848 kbps
    - Compatible to MiFare Classic
    - ISO15693 all modes
    - > 1.65/6.6 & 26.5 kbps
    - > Uplink 1 & 2 sub-carrier
  - Receiver
    - Rx Sensitivity down to 1mVrms
    - Rx Automatic Gain Control
    - Accept external baseband signal from external circuitry for frame level processing
    - Integrated signal strength indicator (SSI)
    - On-Chip Framing handler for supported standard
  - Transmitter
    - Typical proximity operating distance up to 100mm.
    - Software configurable modulation index
    - Maximum driving current up to 200 mA/PIN @ 5V
    - Accept external baseband signal for RF modulation
    - Wide Transmitter driver supply range from 2.7~7.0V



Hardware Specification

AP-VAC100 IP Video Door Phone

RISC CPU

High-end DSP

Front Side



- Internal Speaker
- Video Camera
- LED Side Light
- RF Card Sensor
- TFT LCD Display
- Remote Image
- Local Image
- 3 x 4 Dial Key
- Steel Chassis
- Internal MIC Input

Hardware Specification

AP-VAC100 IP Video Door Phone

RISC CPU

High-end DSP

Back Side

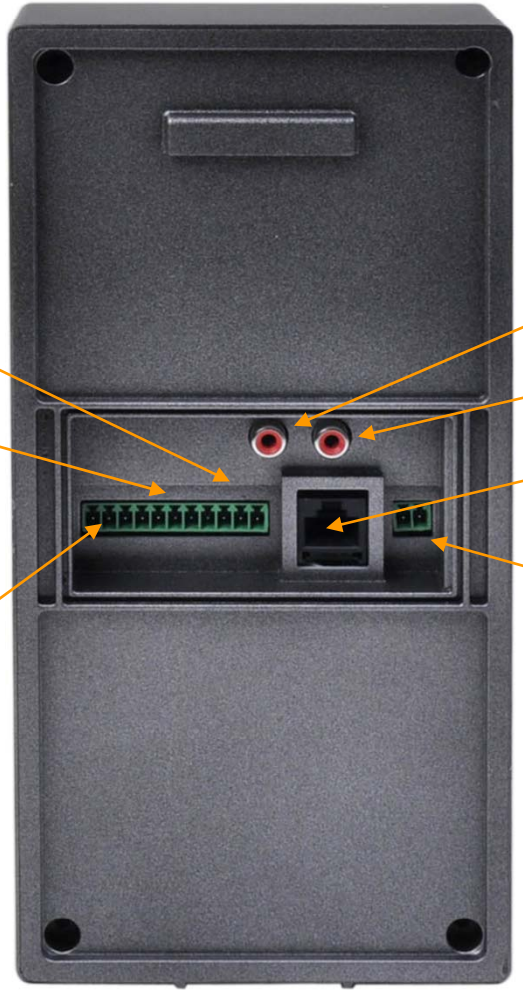

RS485

RS232

2 Alarm,2 Relay Out

Option : Line Out

Option : MIC In

LAN Port

Power Input : Terminal Block
12V 1A

SIP/H.323 Video Phone for Security Guard

SIP Video Phone Comparison for Security Guard

	AP-VP280	AP-VP120
		
LCD Size	7Inch Touch Screen	4.3Inch
Camera	CMOS	CMOS
Video Codec	H.263 MPEG4 H.264	H.263 MPEG4 H.264
Signaling	H.323/SIP	H.323/SIP
Video MCU	N/A	N/A
Voice MCU	3-Party	3-Party
LAN Port	2	2
PoE	N/A	Support

AP-VP280
Video Phone

Main Features

AP-VP280 Video Phone

- 7 Inch LCD Display, Touch Screen
- H.323/SIP Concurrent VoIP Signaling Stack Embedded
- High-performance Video Codec Support
  - H.263, MPEG-4, JPEG, and H.264
- Powerful Image Resolution Support
  - QCIF(176x144), CIF(352x288), QVGA(320x240), and VGA(640x480)
- Two(2) 10/100Mbps Fast Ethernet (IP Share ,etc)
- G.711/G.726/G.723/G.729, etc
- Powerful Network Protocols (PPPoE, DHCP, Static Routing, etc)
- Rate Control for Video Traffic QoS
  - Ensuring Optimized Quality, Frame Rate with Limited Bandwidth
- Firmware Upgradeable Architecture
- VPMS (VoIP Plug&Play Management System) for Large Scale Deployment
- Advanced Voice QoS Mechanism

Hardware Specification

AP-VP280 Video Phone

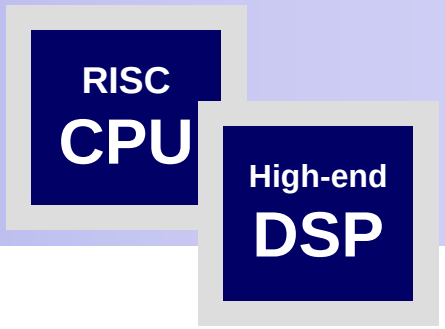

- RISC Microprocessor Computing Power
- CMOS Image Sensor, Samsung LCD, Touch Screen
- High-end Programmable DSP Hardware Architecture
- Powerful Video Interface
  - RCA Video Input/Output, S-Video Output
- High quality Audio and Voice Interface
  - Stereo Audio Input & Output Connector
- Network Interface
  - Two(2) 10/100Mbps Fast Ethernet
  - One(1) RS-232C Console
  - One(1) USB 1.0 Interface
- PSTN Interface
  - One(1) FXO(RJ11) interface
- Power Supply
  - *External DC adaptor (5V)*

Hardware Specification

AP-VP280 Video Phone

RISC CPU

High-end DSP





Hardware Specification

AP-VP280 Video Phone

RISC CPU

High-end DSP

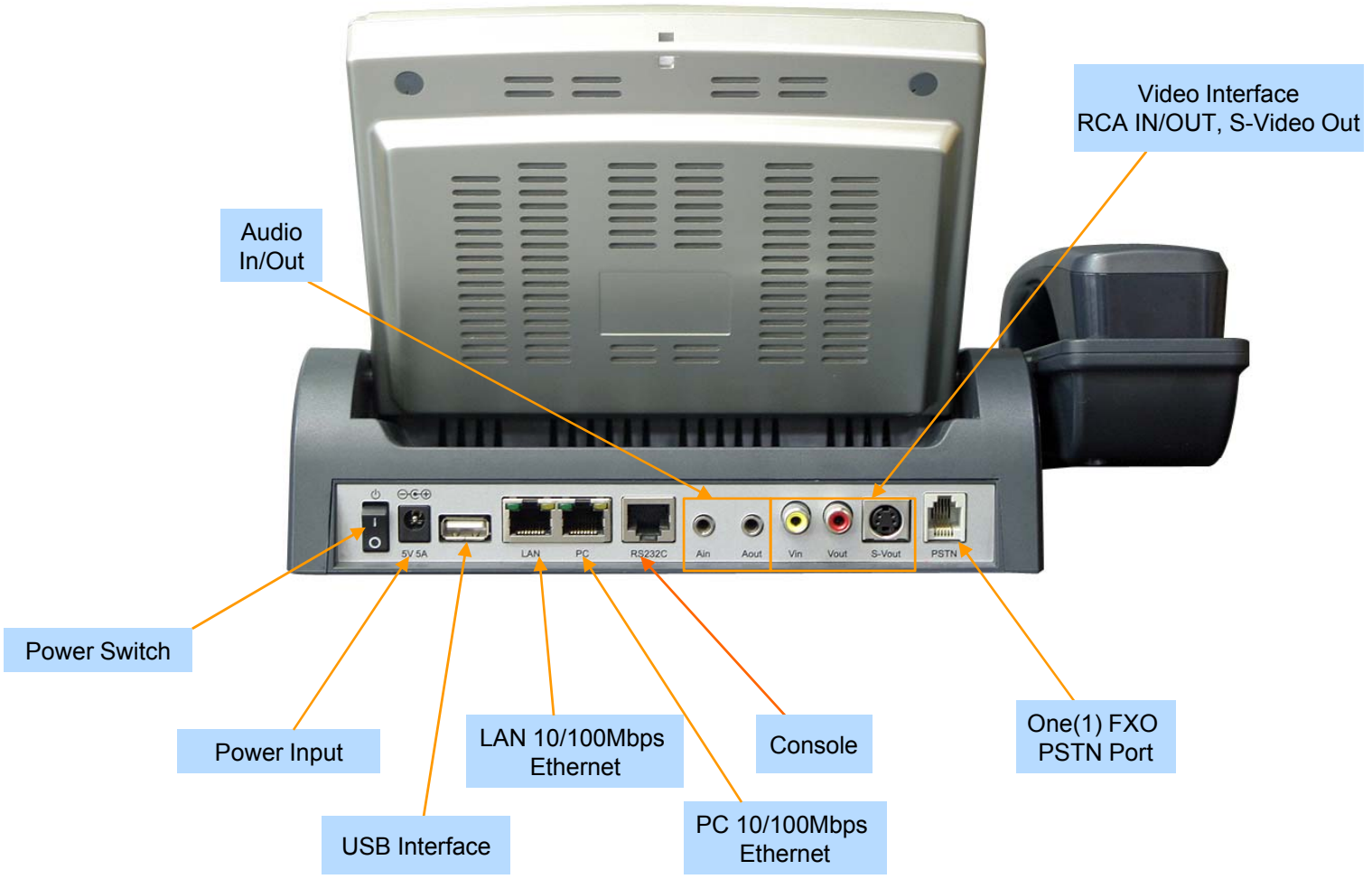

AP-VP120
Video Phone

Main Features

AP-VP120 Video Phone

- 4.3 Inch Color LCD Display, Touch Screen
- H.323/SIP Concurrent VoIP Signaling Stack Embedded
- High-performance Video Codec Support
  - H.263, MPEG-4, JPEG, and H.264
- Powerful Image Resolution Support
  - QCIF(176x144), CIF(352x288), QVGA(320x240), and VGA(640x480)
- Two(2) 10/100Mbps Fast Ethernet (IP Share ,etc)
- G.711/G.726/G.723/G.729, etc
- Powerful Network Protocols (PPPoE, DHCP, Static Routing, etc)
- Rate Control for Video Traffic QoS
  - Ensuring Optimized Quality, Frame Rate with Limited Bandwidth
- Firmware Upgradeable Architecture
- VPMS (VoIP Plug&Play Management System) for Large Scale Deployment
- Advanced Voice QoS Mechanism

Hardware Specification

AP-VP120 Video Phone

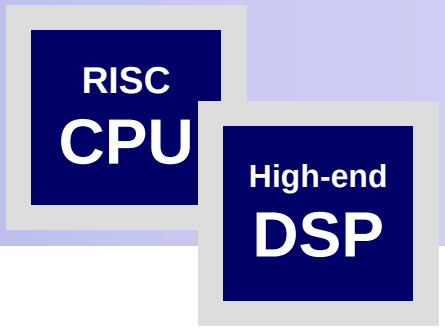

- RISC Microprocessor Computing Power
- CMOS Image Sensor
- 4.3 Inch Color LCD with Touch Screen
- High-end Programmable DSP Hardware Architecture
- Powerful Video Interface
  - RCA Video Input/Output, S-Video Output
- High quality Audio and Voice Interface
  - Stereo Audio Input & Output Connector
- Network Interface
  - Two(2) 10/100Mbps Fast Ethernet
  - One(1) USB 1.0 Interface
- PSTN FXO(RJ11) Interface : Option
- Power Supply
  - *External DC adaptor (5V)*
  - *PoE (Power over Ethernet)*

Hardware Specification

AP-VP120 Video Phone

RISC CPU

High-end DSP



Smart Hub for Wireless/Wired Sensor Devices

Smart Hub Equipment Comparison Table

Model / Service Features	AP-SH50	AP-SAH50	AP-SH050
			
Sensor Type	Wireless	Wired	Wireless/Wired
	Zigbee, Zwave		Zigbee, Zwave
Wired Sensor Port	N/A	6-Port	6-Port
Smart Appl. for Phone, PAD	Support	Support	Support
Smart Web Manager	Support	Support	Support
LAN Port	1	1	1
PoE(Option)	Option	Option	Option

Smart Hub Service Diagram (Smart Home Solution)

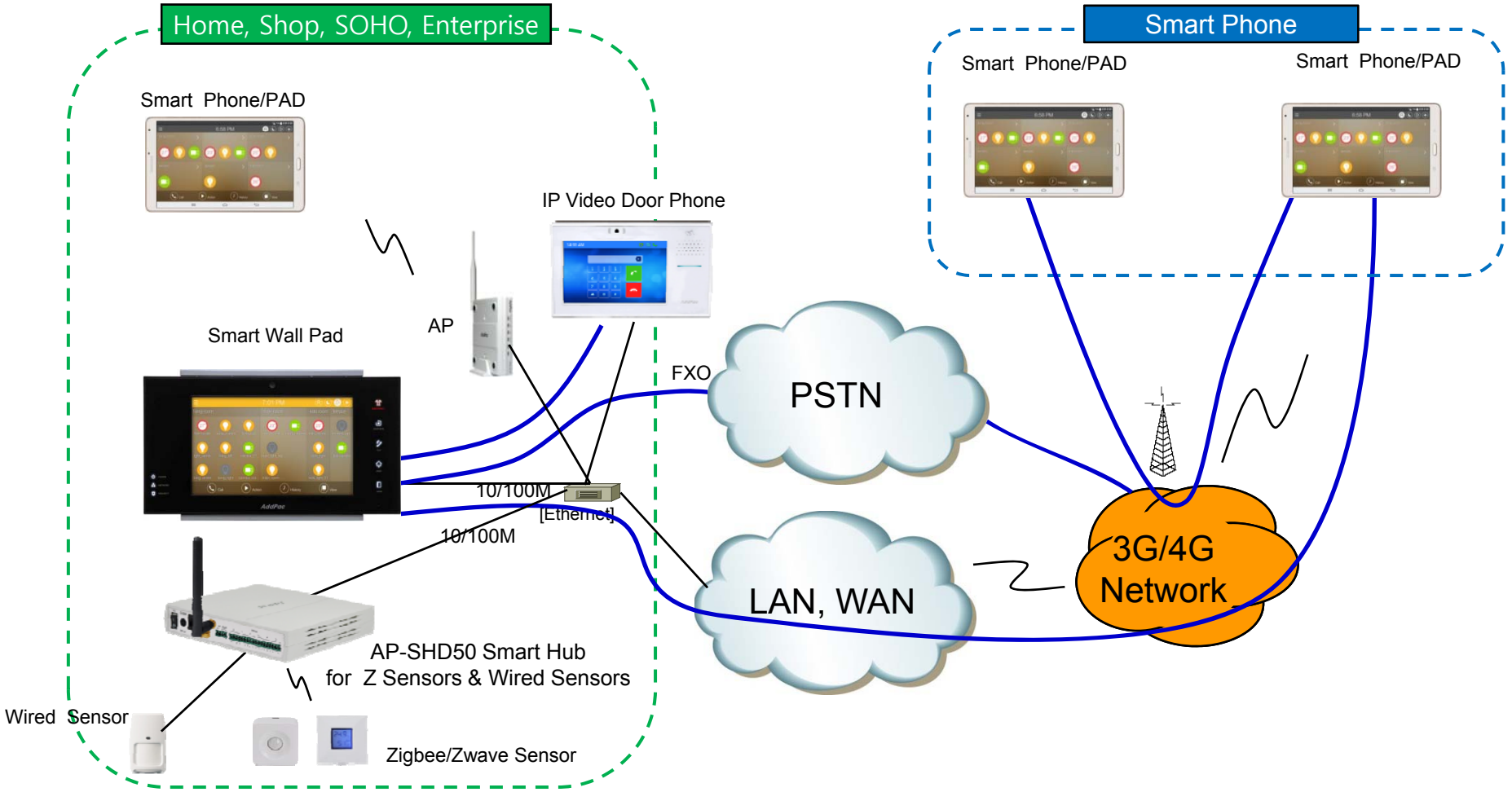

Smart Hub Service Diagram (Standalone Type Smart Hub Device)

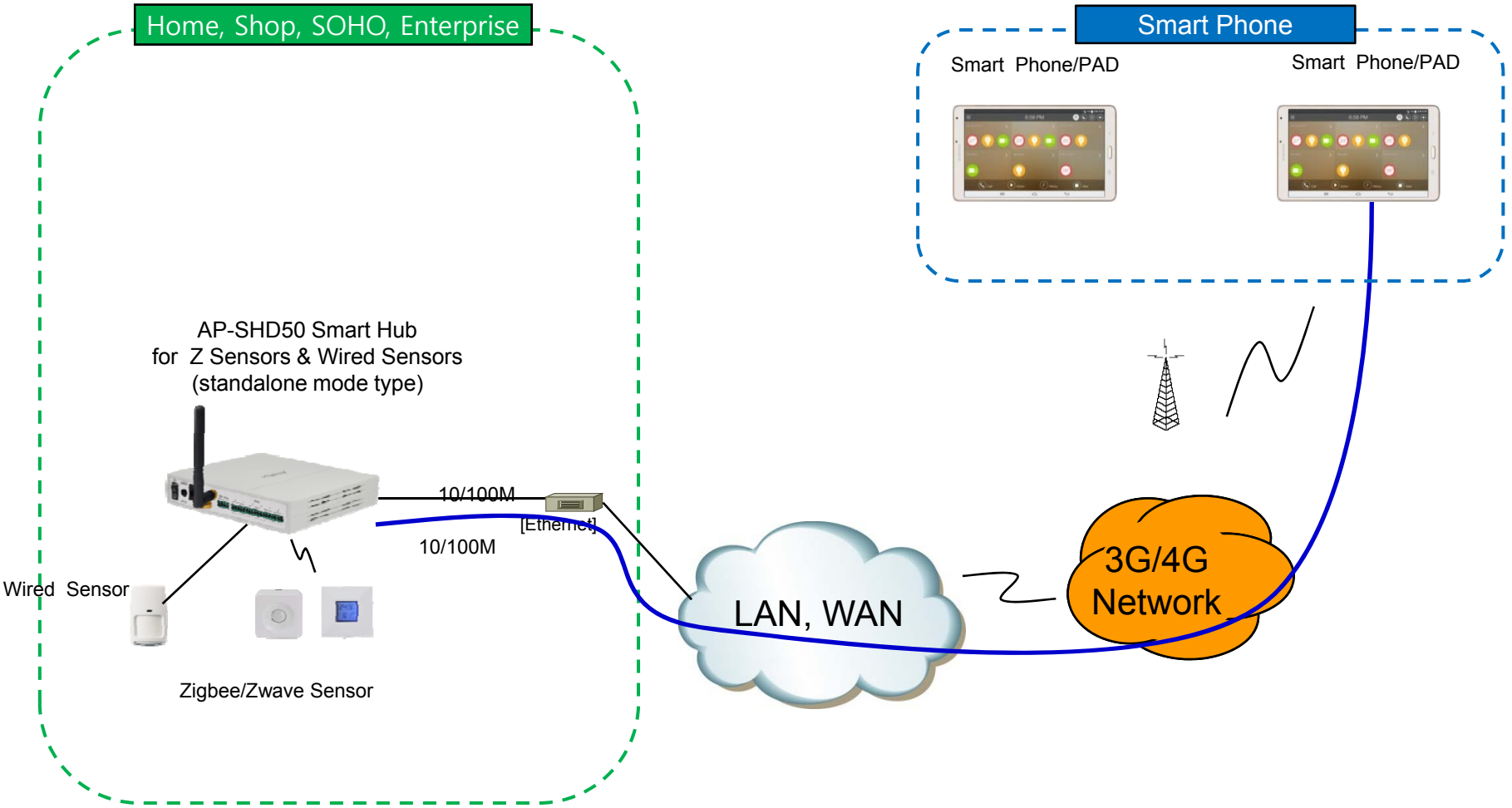

Smart Hub Service Diagram
(Clone Type Smart Hub Device)

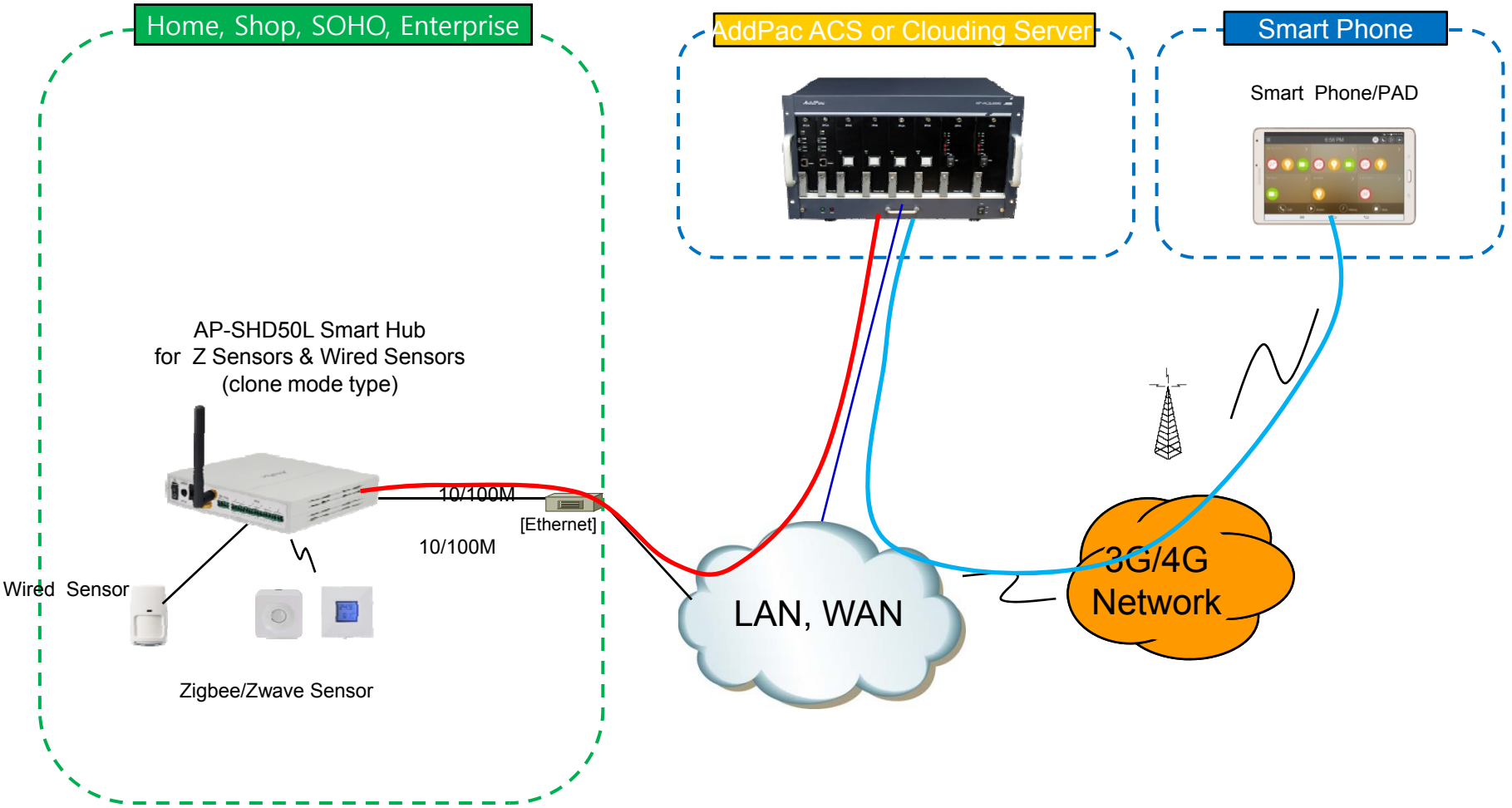

AP-SH50 Smart Hub

Product Overview

AP-SH50 Smart Hub for Z sensors

- Advanced Smart Home Solution
- Zigbee/Zwave Dual Sensor Interface Support
- Smart IP Routing Service Features for Sensor Network
- Smart Wall Pad Interworking Service Features
- Smart Hub Interworking Support for Third Party
- High Performance RISC Programmable Architecture
- One 10/100Mbps Fast Ethernet
- High Performance LAN-to-Zigbee/Zwave Routing Capability
- Powerful Network Protocols (PPPoE, DHCP, Static Routing, etc)
- Firmware Upgradeable Architecture
- Smart Web based Management
- Light and Compact Design with External Power Supply

Hardware Specification

AP-SH50 Smart Hub for Z sensors

- RISC Microprocessor Computing Power
- 1-Port Zigbee Interface
- 1-Port Zwave Interface
- 1-Port Zigbee Antenna
- 1-Port Zwave Antenna
- Network Interface
  - -One(1) 10/100Mbps Fast Ethernet (RJ45)
- Run LED, LAN LED, Port LEDs
- External Power Supply



Hardware Specification

AP-SH50 Smart Hub for Z sensors

RISC CPU

Smart Hub Service Diagram

AP-SH50 Smart Hub Internal H/W Block Diagram

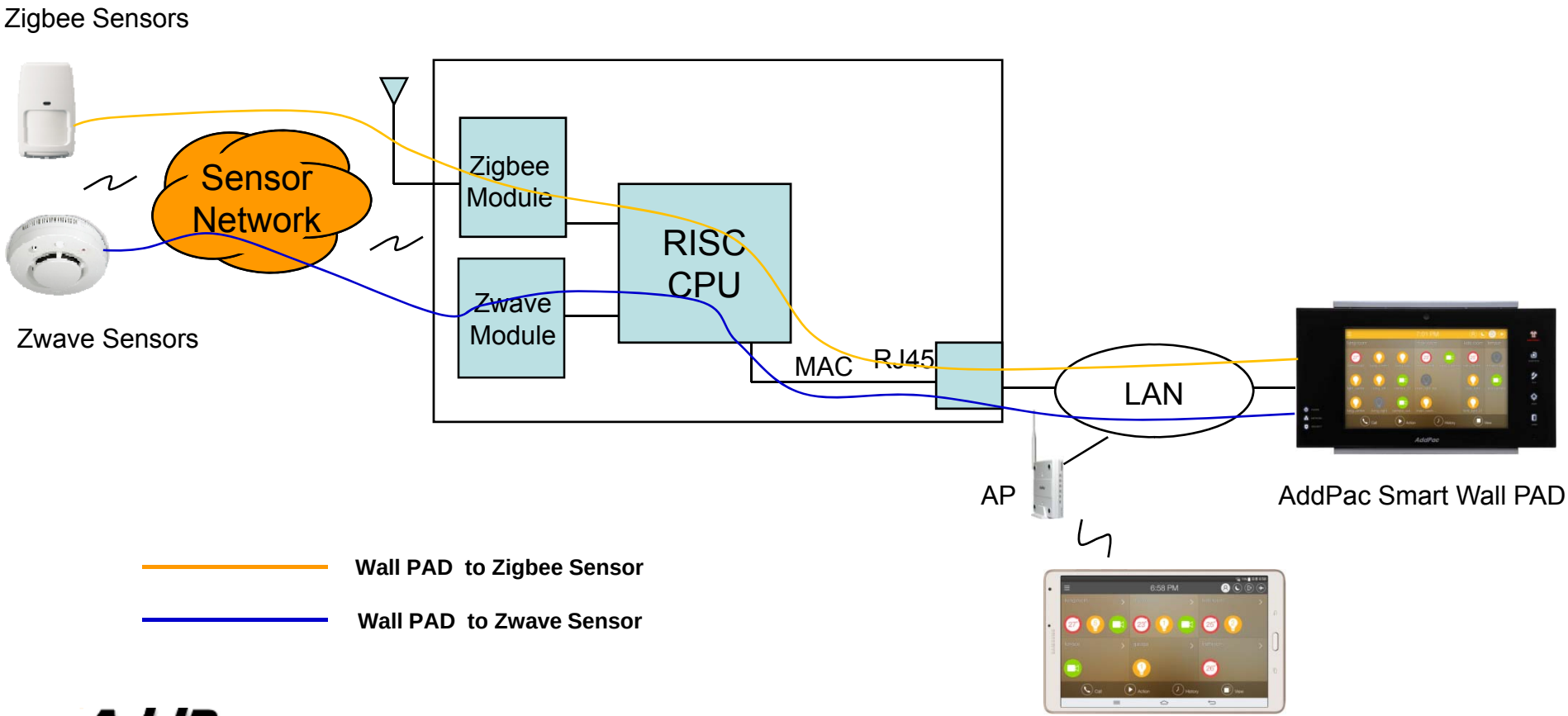

Hardware Specification

AP-SH50 Smart Hub for Z sensors

Network interface Configurations

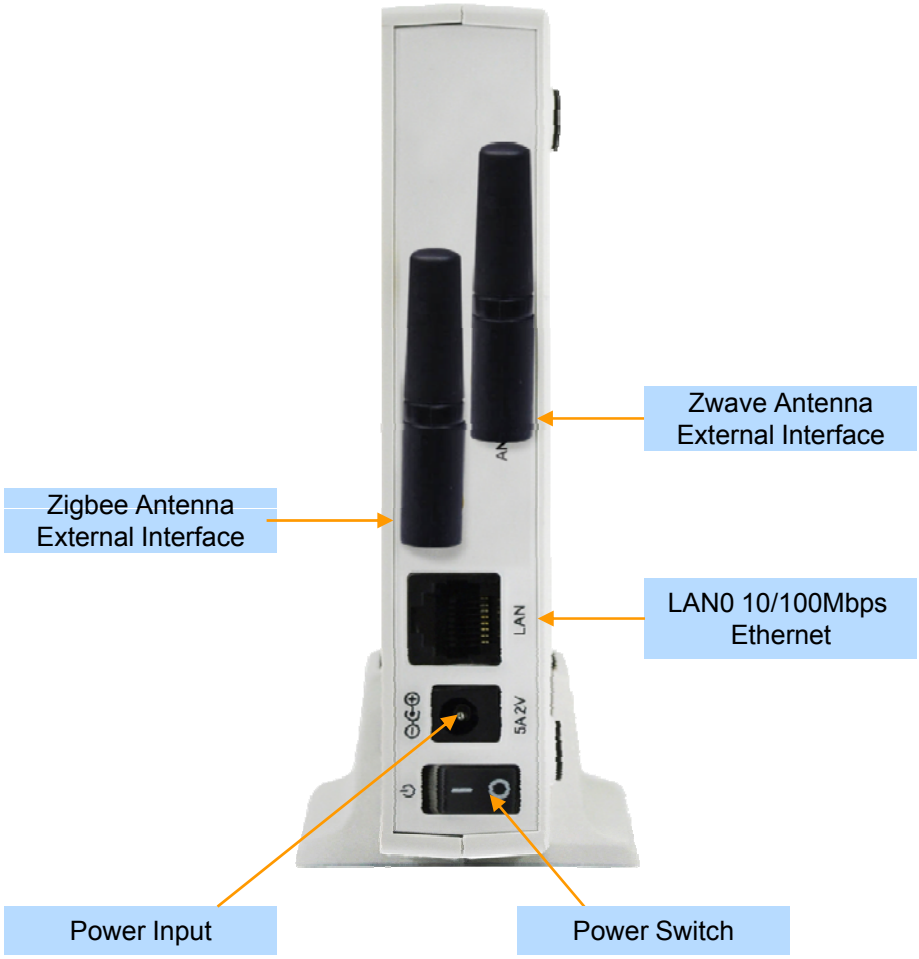



AP-SAH50 Smart Hub

Product Overview

AP-SAH50 Smart Hub for Legacy Wired Sensors

- Advanced Smart Home Solution
- Legacy Wired Sensor Interface Support
- Smart IP Routing Service Features for Sensor Network
- Smart Wall Pad Interworking Service Features
- Smart Hub Interworking Support for Third Party
- High Performance RISC Programmable Architecture
- One 10/100Mbps Fast Ethernet
- PoE Support : Option
- High Performance LAN-to-Wired Legacy Sensor Routing Capability
- Powerful Network Protocols (PPPoE, DHCP, Static Routing, etc)
- Firmware Upgradeable Architecture
- Smart Web based Management
- Light and Compact Design with External Power Supply

Hardware Specification

AP-SAH50 Smart Hub for Legacy Wired Sensors

- RISC Microprocessor Computing Power
- 6-Port Wired Sensor
  - Alarm Input
  - Power Output for Sensor Power Supply
- Speaker Port, Beacon Port
- Network Interface

  -One(1) 10/100Mbps Fast Ethernet (RJ45)
- LAN LED, Sensor Port LED
- External Power Supply
- PoE (Power over Ethernet) : Option

Hardware Specification

AP-SAH50 Smart Hub for Legacy Wired Sensors

Smart Hub Service Diagram

AP-SH50 Smart Hub Internal H/W Block Diagram

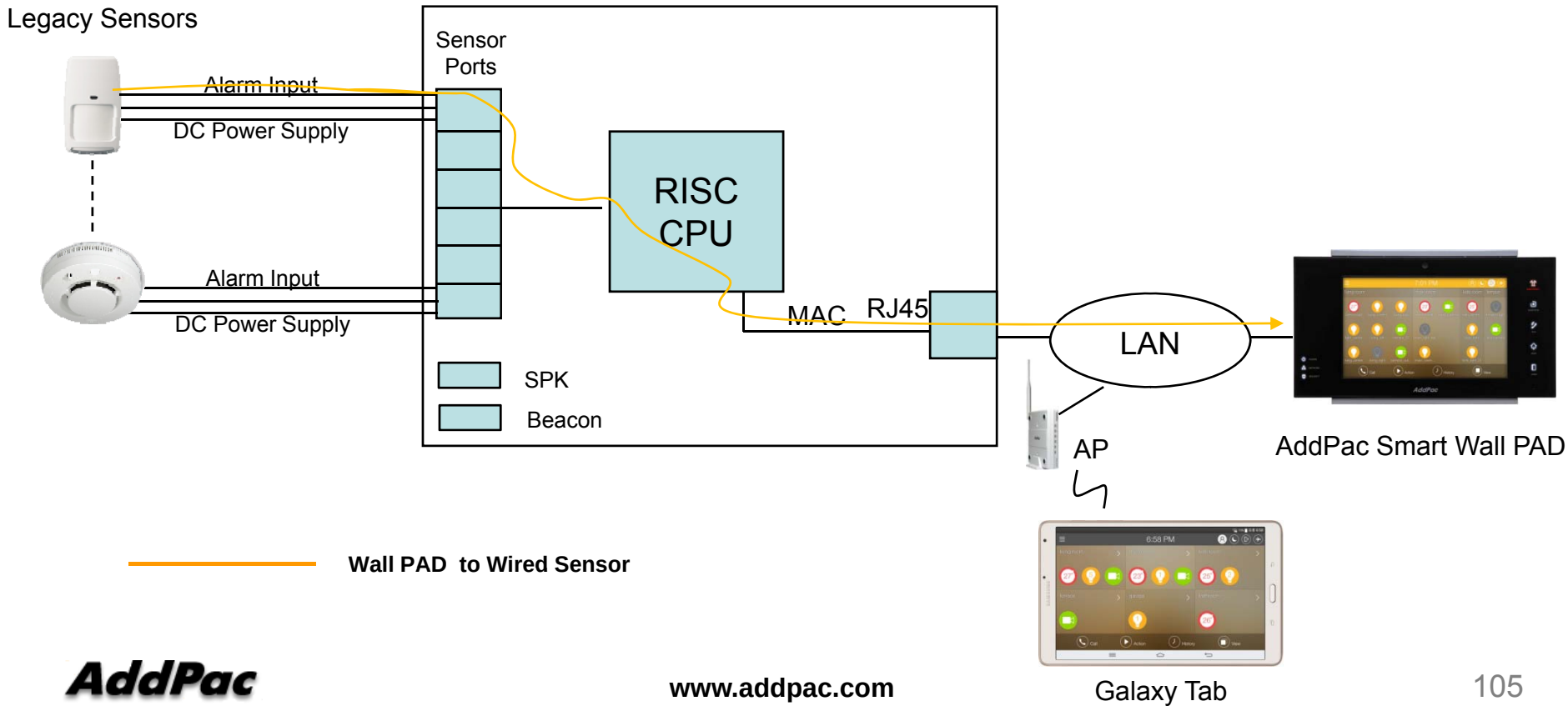

Hardware Specification

AP-SAH50 Smart Hub for Legacy Wired Sensors

Back Side

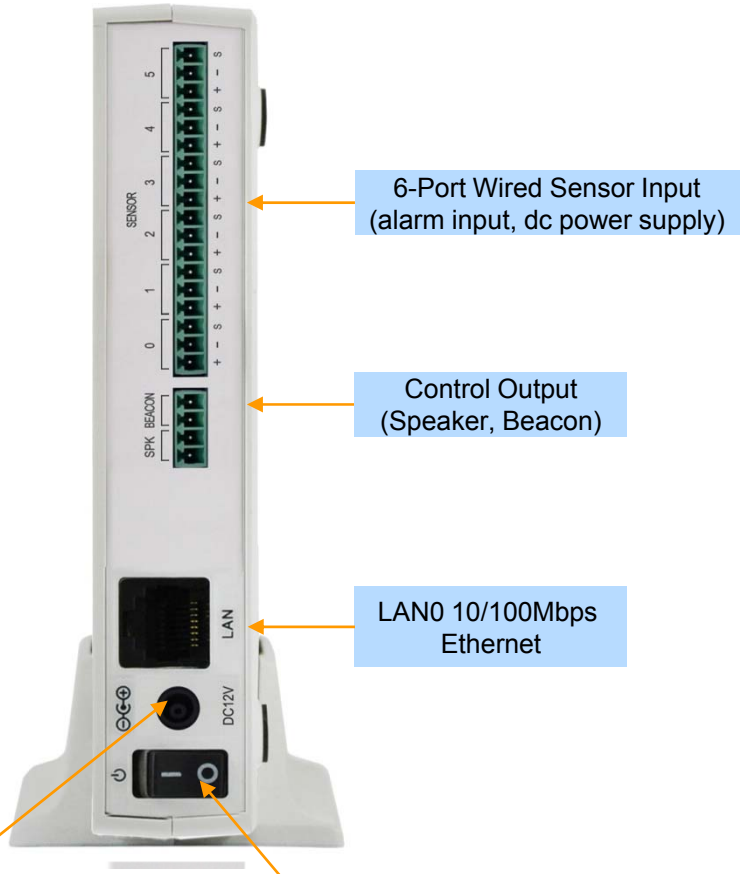

6-Port Wired Sensor Input
(alarm input, dc power supply)

Control Output
(Speaker, Beacon)

LAN0 10/100Mbps
Ethernet

Power Input

Power Switch

Front Side

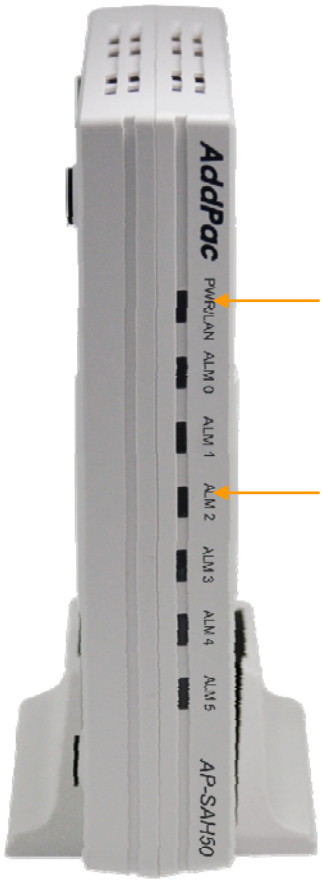

LAN Port LED

Sensor Port LED

AP-SHD50 Smart Hub

Product Overview

AP-SHD50 Smart Hub for Z Sensors & Wired Sensors

- Advanced Smart Home Solution
- Zigbee/Zwave Dual Sensor Interface Support
- Legacy Wired Sensor Interface Support
- Smart IP Routing Service Features for Sensor Network
- Smart Wall Pad Interworking Service Features
- Smart Hub Interworking Support for Third Party
- High Performance RISC Programmable Architecture
- One 10/100Mbps Fast Ethernet
- PoE Support : Option
- High Performance LAN-to-Zigbee/Zwave Routing Capability
- Powerful Network Protocols (PPPoE, DHCP, Static Routing, etc)
- Firmware Upgradeable Architecture
- Smart Web based Management
- Light and Compact Design with External Power Supply

Hardware Specification

AP-SHD50 Smart Hub for Z Sensors & Wired Sensors



- RISC Microprocessor Computing Power
- 1-Port Zigbee Interface
- 1-Port Zwave Interface
- 6-Port Wired Sensor
  - Alarm Input
  - Power Output for Sensor Power Supply
- Speaker Port, Beacon Port
- Network Interface

  -One(1) 10/100Mbps Fast Ethernet (RJ45)
- LAN LED, Port LEDs
- External Power Supply
- PoE (Power over Ethernet) : Option

Hardware Specification

AP-SHD50 Smart Hub for Z Sensors & Wired Sensors

Smart Hub Service Diagram

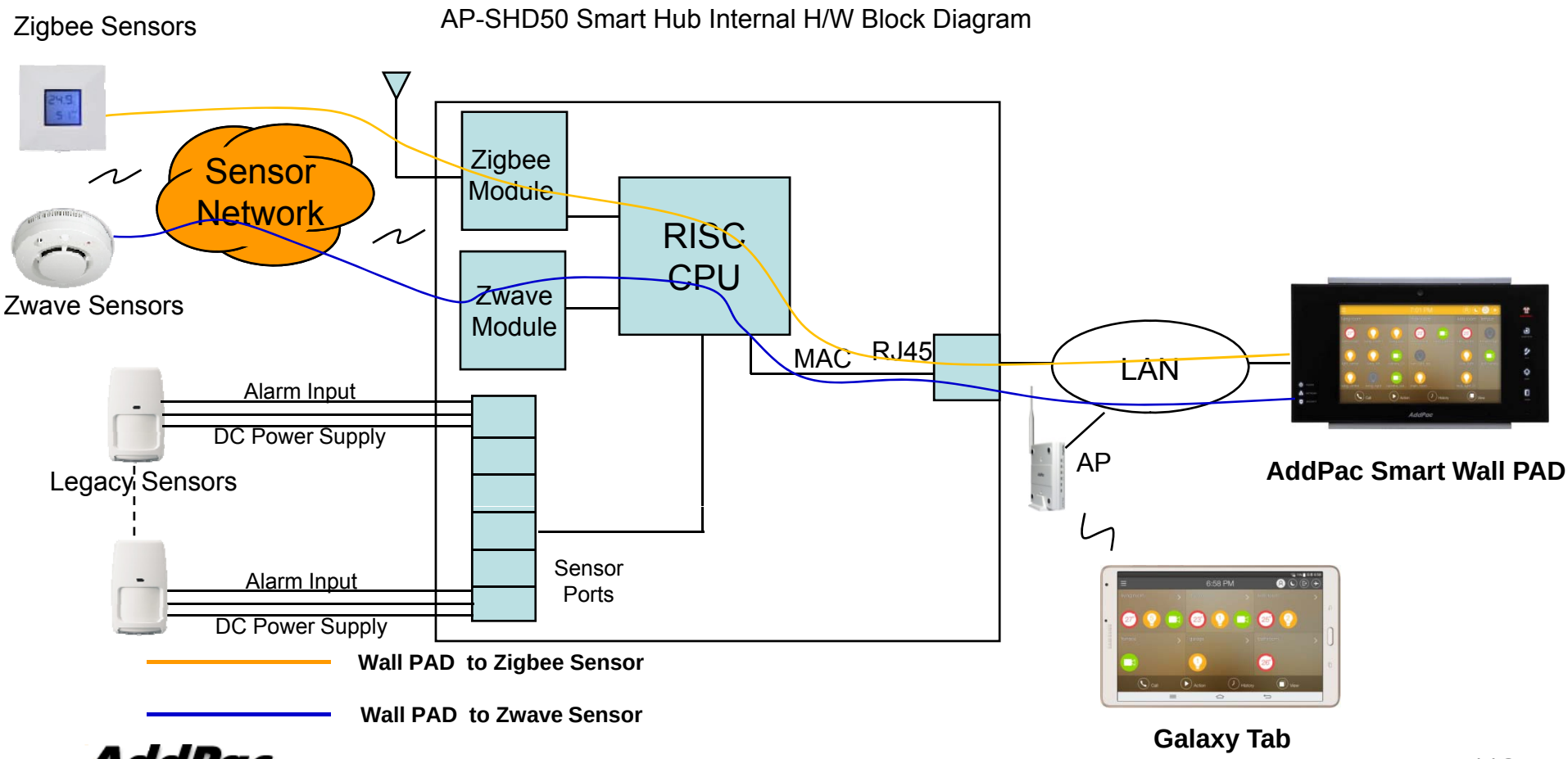

Hardware Specification

AP-SHD50 Smart Hub for Z Sensors & Wired Sensors

Network interface Configurations

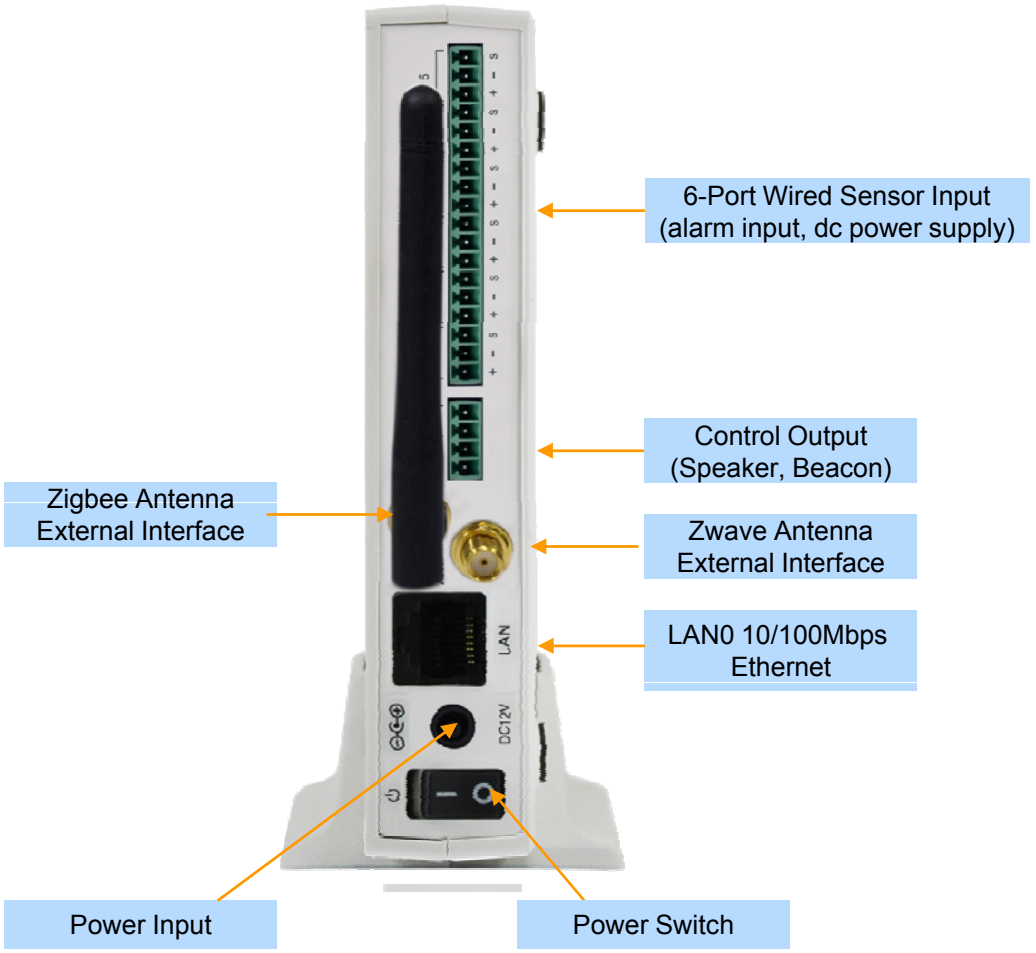



Android Smart Home Application Software (AP-ASH100)

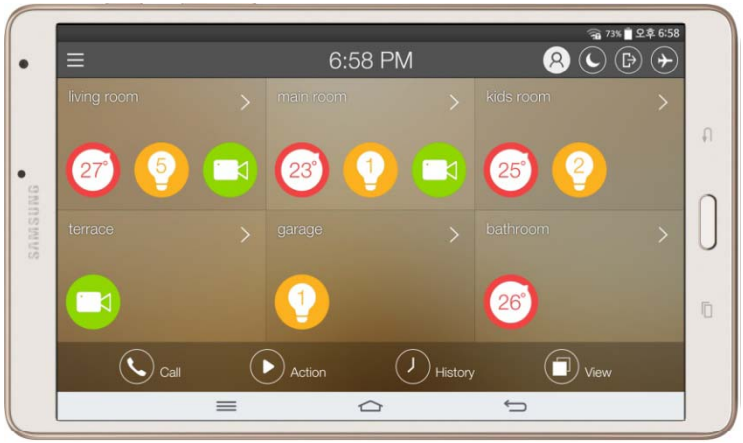

AP-ASH100 Overview

- It supports receiving a video call from video door phone by visitor.
- It supports making a video call to video door phone to see door side.
- It supports bidirectional video call from security guard video phone.
- It supports smart hub devices for sensor device handling.
- It supports IP camera view mode using RTSP protocol
- It supports standard based SIP signaling protocol.
- It supports below voice and video codecs

  - Voice Codec : G.711ulaw/alaw, G.726
  - Video Codec : H.264, H.263. MPEG4

AP-ASH100 Network Service Diagram

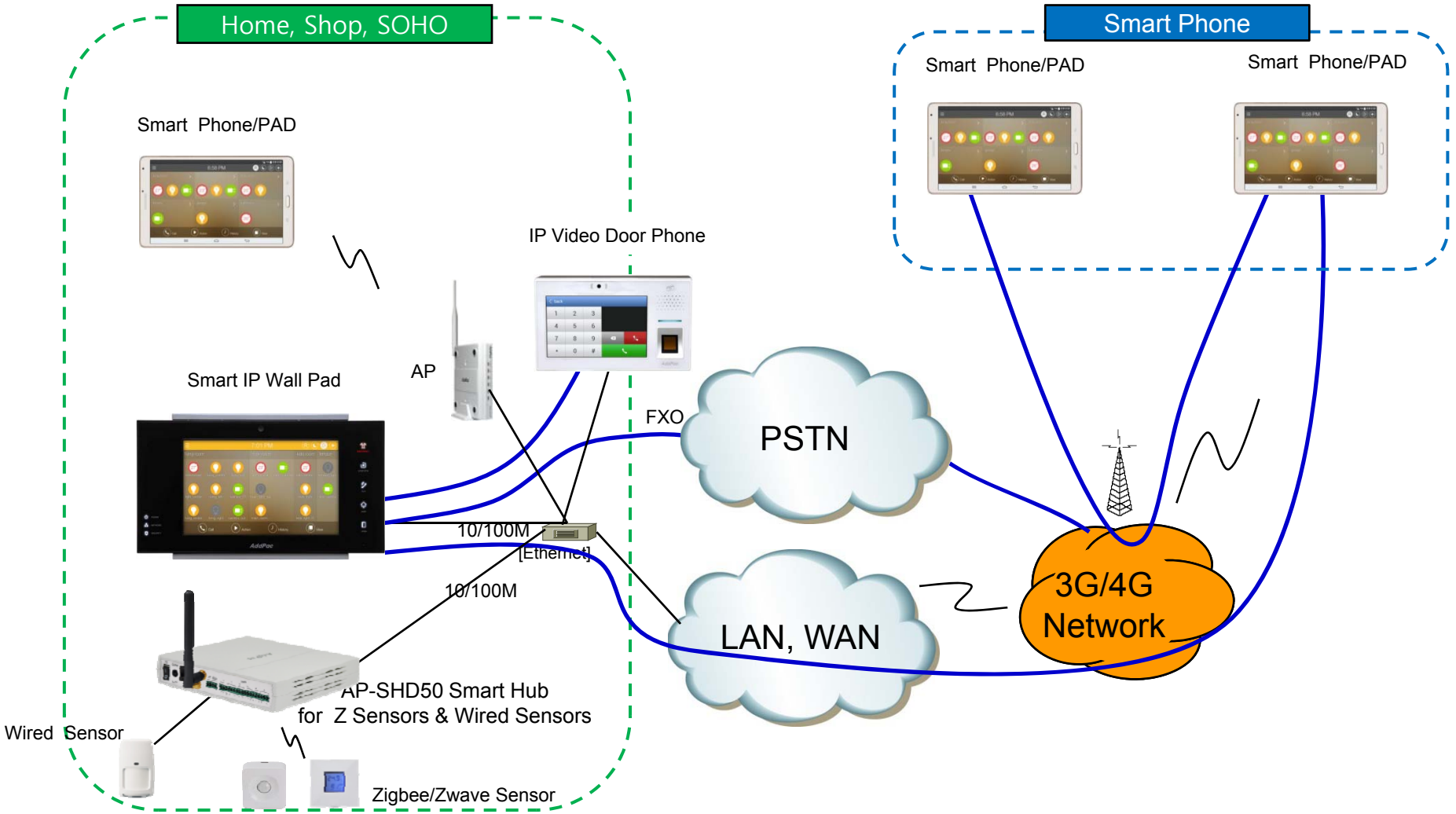

SIP Register

Smart Home Application Register to AP-ACS1000

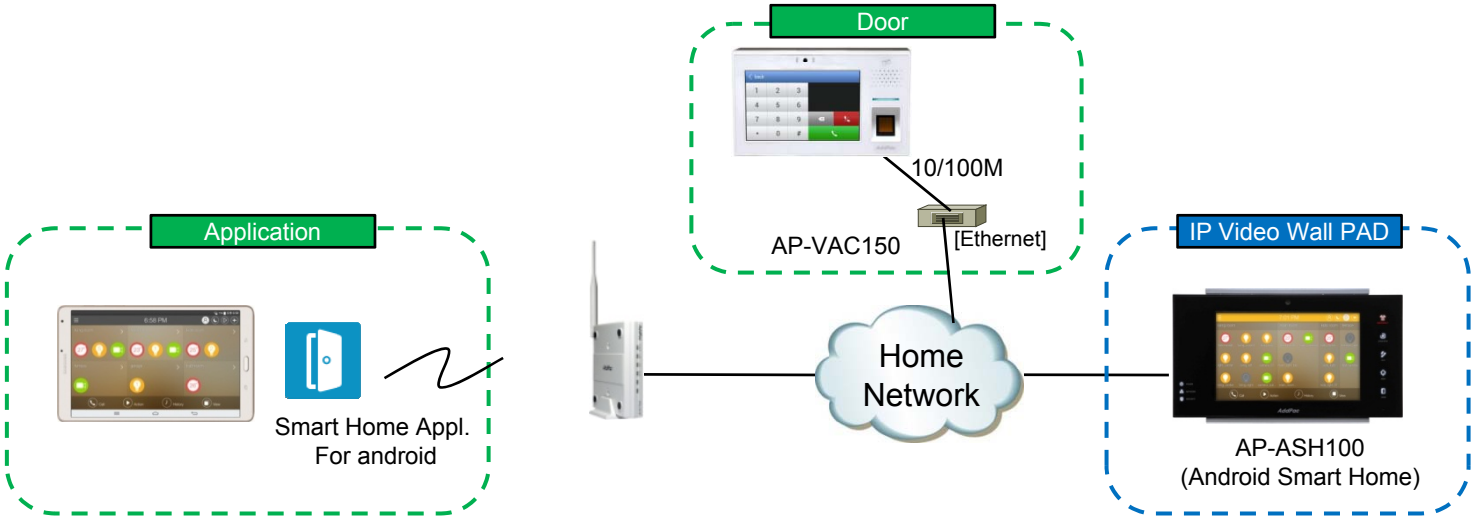

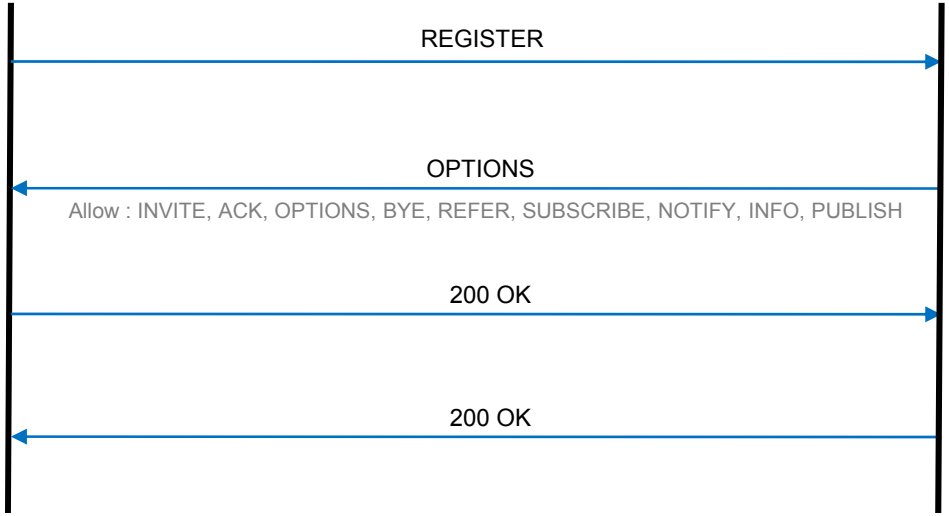

SIP Video Call Flow

Door Open Flow

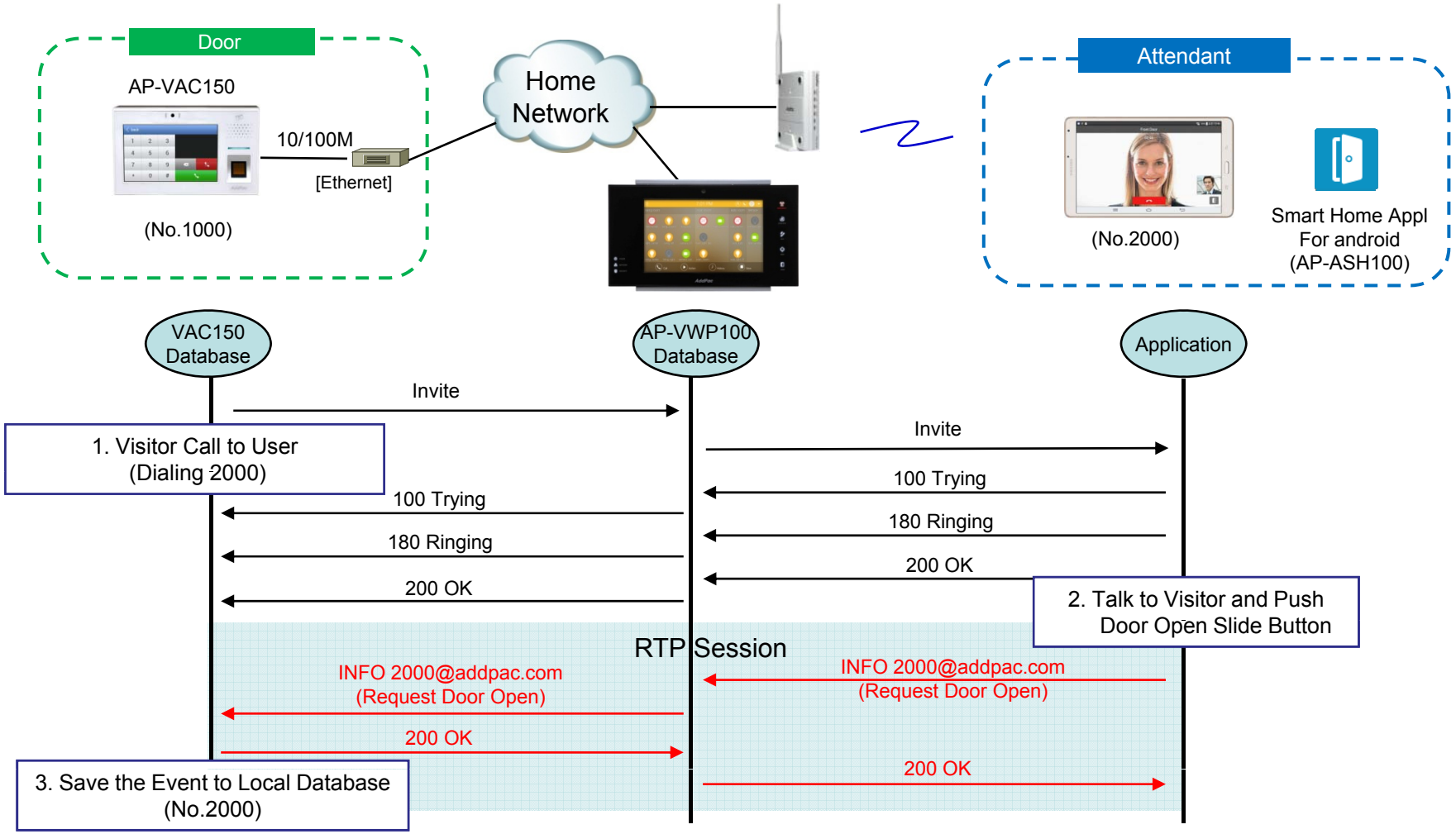

UI examples Lists

- Main View (Zone Summary)
- Armed Mode (Away, Stay, Night)
- Short View
- Zone View
- Zone Setting and Configuration
- IP Camera View Mode (Home, Outside Home)
- Call View (Favorite Call, Recent Call, Phone Book, etc)
- Video Call View
- Sensor Control View (Ex: Light Control, Thermostat, etc)
- Sensor Control View (Action, Mode, Alert, etc)

Main View (Zone Summary)

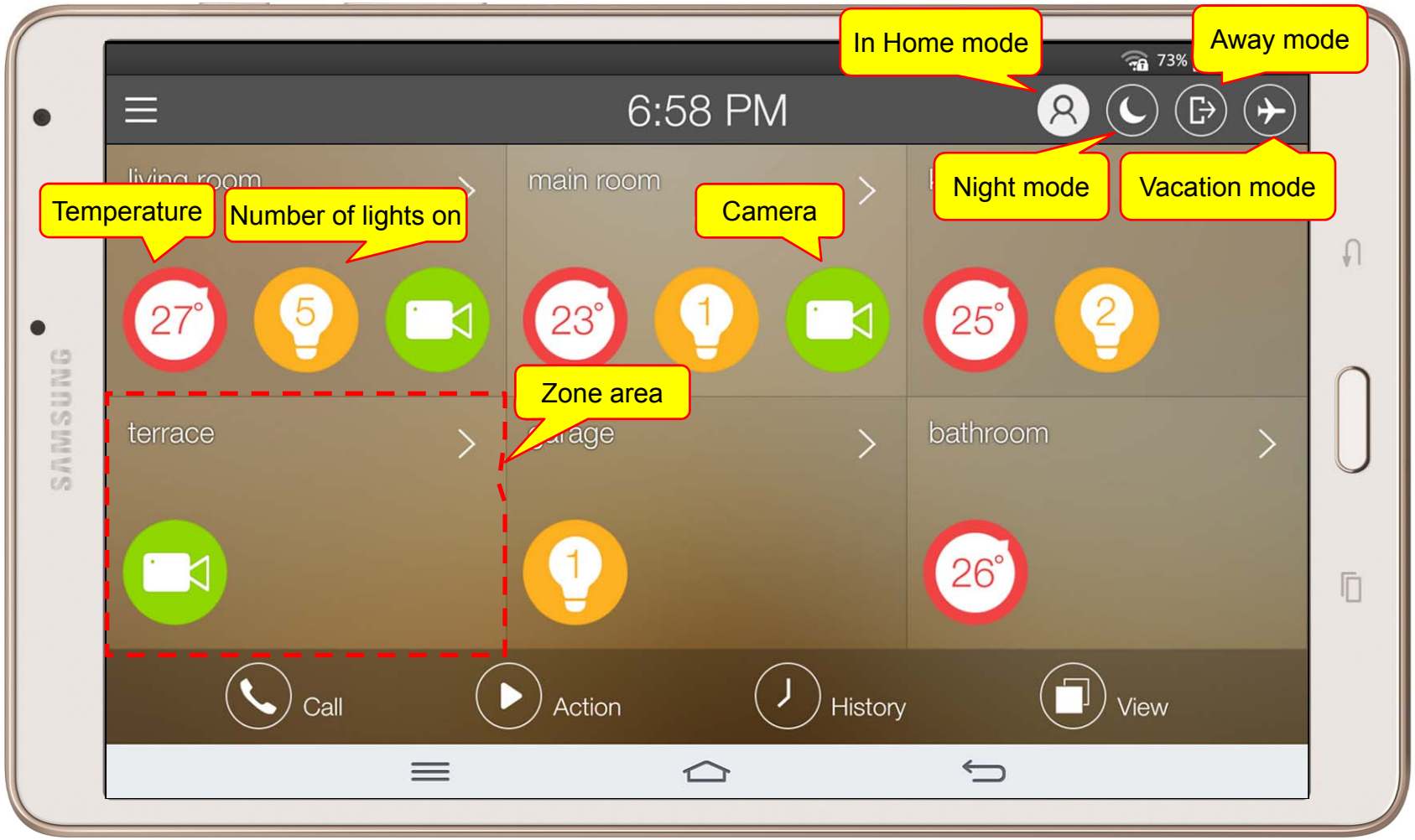

Main View (Cont.)



Main View (Zone Detail)

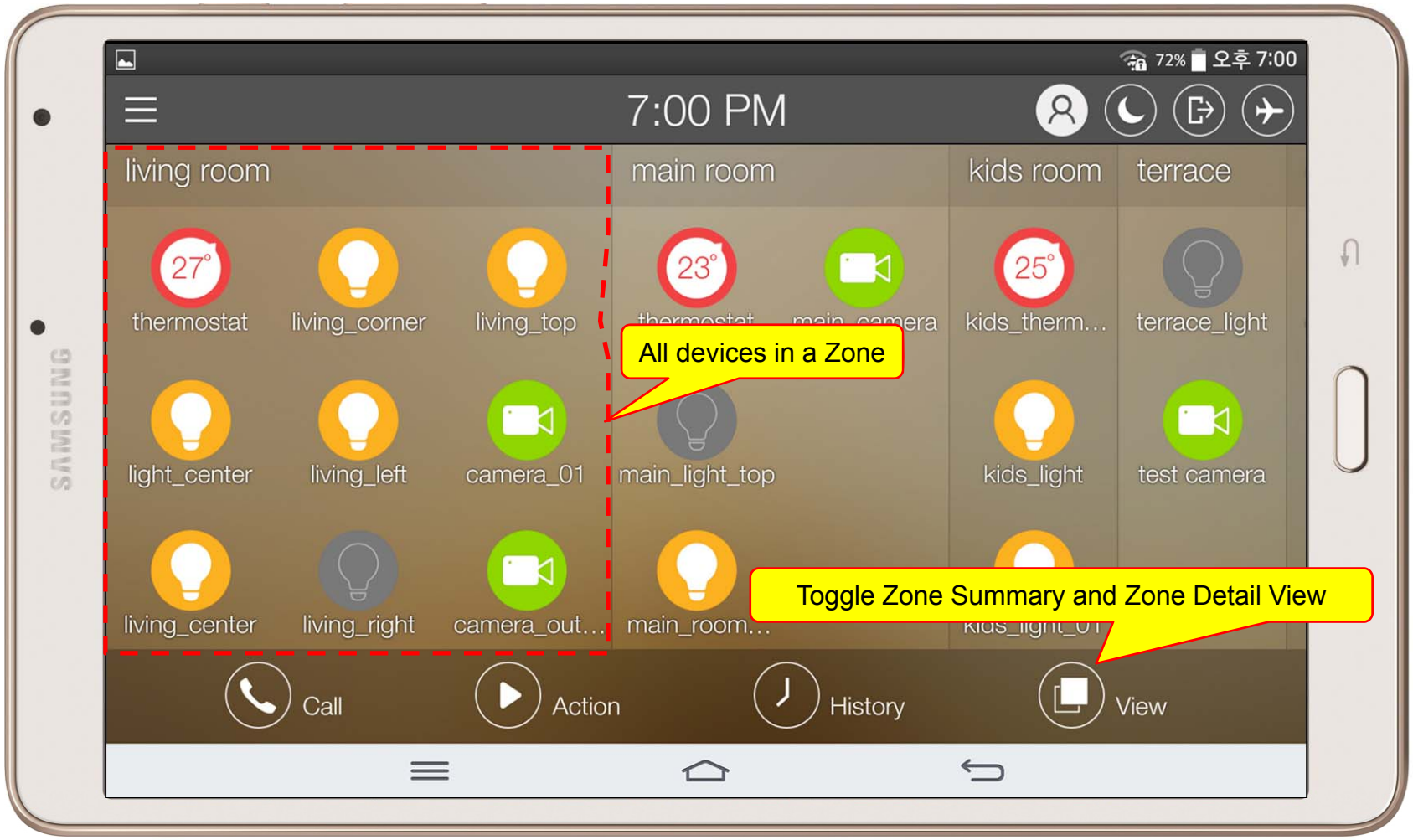

Armed Mode

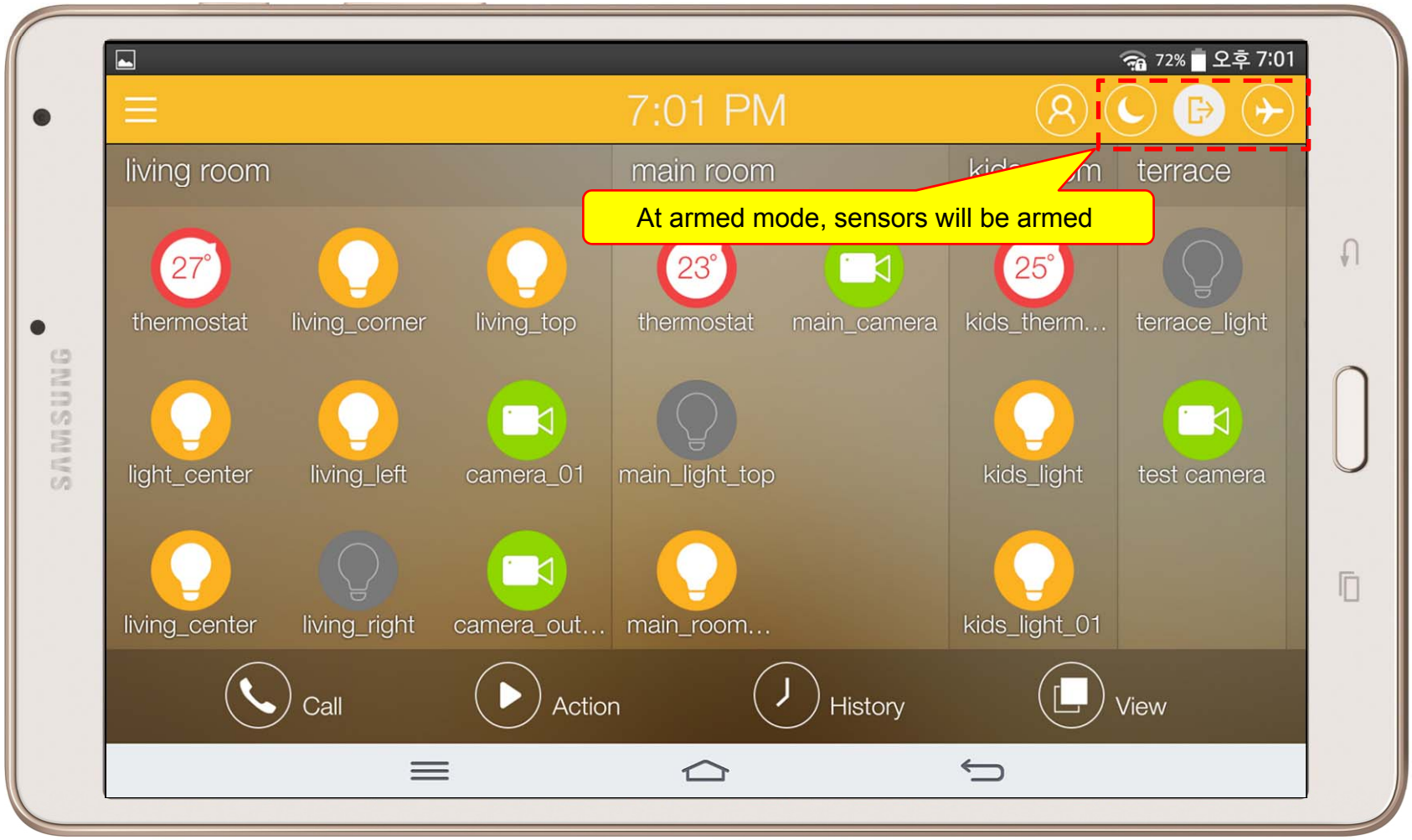
72% 오후 7:01
7:01 PM
living room
main room
terrace
At armed mode, sensors will be armed
27°
thermostat
living_corner
living_top
23°
thermostat
main_camera
25°
kids_therm…
terrace_light
light_center
living_left
camera_01
main_light_top
kids_light
test camera
living_center
living_right
camera_out…
main_room…
kids_light_01
Call
Action
History
View
SAMSUNG

Video Call View

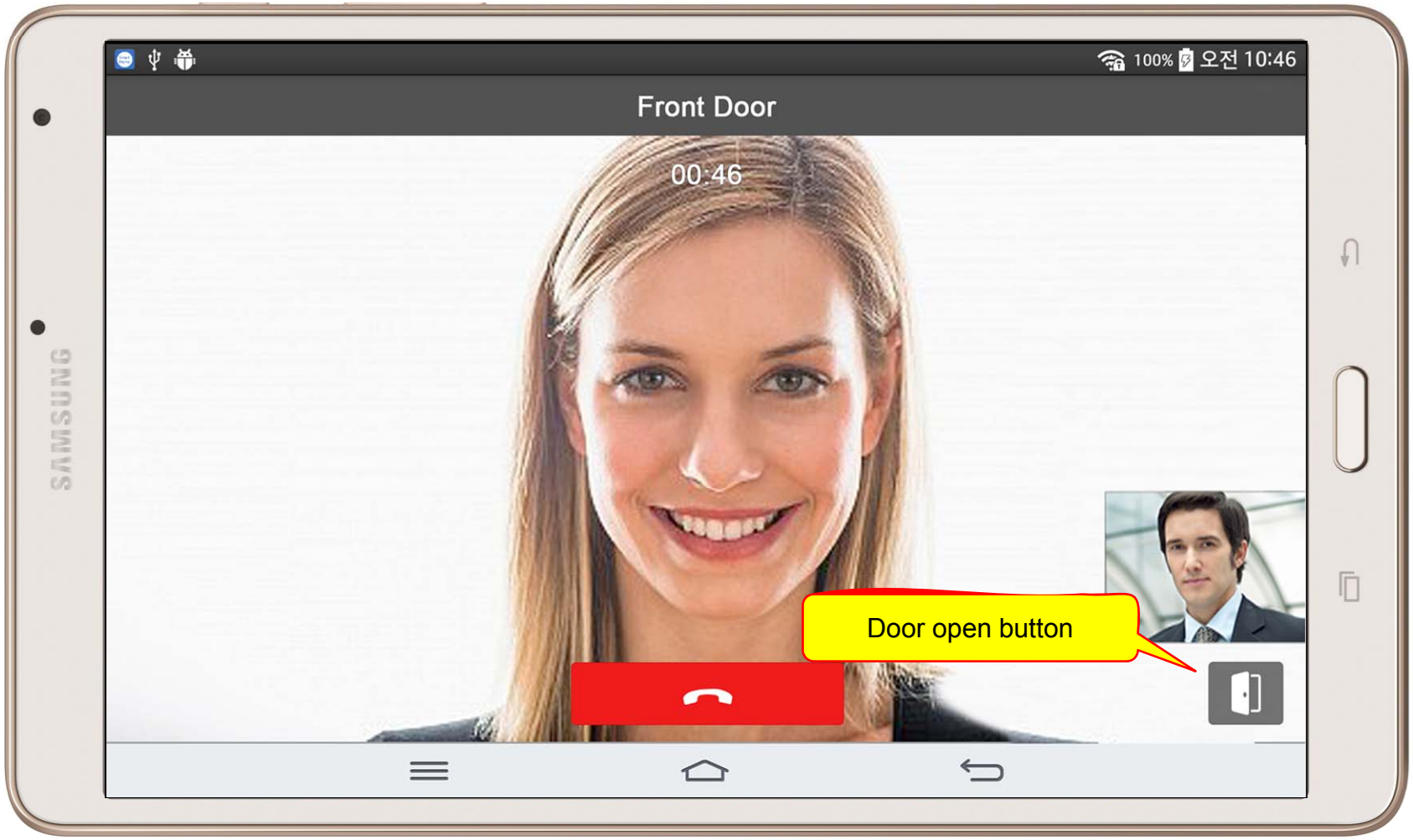

Thank you!

AddPac Technology Co., Ltd.
Sales and Marketing

Phone +82.2.568.3848 (KOREA)
FAX +82.2.568.3847 (KOREA)
E-mail sales@addpac.com