

AP-GS2500
Multi-Port GSM Gateway
(AP-N1-GSM4UI)

High Performance GSM Gateway Solution





AddPac Technology

Sales and Marketing

www.addpac.com

Contents

AP-GS2500 Multi-Port GSM Gateway

- Product Overview
- Hardware Specification
- GSM Module Specification
- APOS Technology
- VoIP (Voice over IP) service
- Advanced QoS Features
- Network Protocols
- Network Management
- Smart Web Management
- Security Management
- Application Service
- Ordering Information



Product Overview

AP-GS2500 Multi-Port GSM Gateway

- Four(4) Module Slots for 4-Port GSM Module, 8FXS/8FXO Analog Interface (Up to 16-Port GSM)
- H.323/SIP Dual Concurrent Stack Embedded
- High Performance RISC & Programmable DSP Architecture
- G.711/G.726/G.723/G.729, T.38 Fax , VAD, etc
- Powerful Network Protocols (PPPoE, DHCP, Static Routing, etc)
- Two(2)10/100Mbps Fast Ethernet
- One(1) RS-232C Port for Command Line Interface
- Firmware Upgradeable Architecture
- VPMS (VoIP Plug&Play Management System) for Large Scale Deployment
- Advanced Voice QoS Mechanism
- Rack Mountable Chassis with Internal Power Supply

Product Highlights

AP-GS2500 Multi-Port GSM Gateway

Powerful GSM Gateway
Up to 16-Port GSM Interface

State-of-art Signaling
H.323, SIP, MGCP
Concurrent Triple Stack

Rack Mountable Chassis

Four(4) Module Slot
4-Port GSM Module,
8-Port FXS Module
8-Port FXO Module

High Performance RISC CPU
+ Programmable DSP



Excellent Voice Quality
G.729/G.723/G726/G711

Broadband IP Networking
With Two(2) 10/100Mbps
Fast Ethernet

APOS™Technology
Firmware Upgradeable Architecture

VPMS Large Scale VoIP
Gateway Management Support

Powerful Network Protocol Support

Powerful Trouble Shooting & Debugging Feature Support

Advanced Voice Traffic QoS Mechanism

APOS Technology

AP-GS2500 Multi-Port GSM Gateway

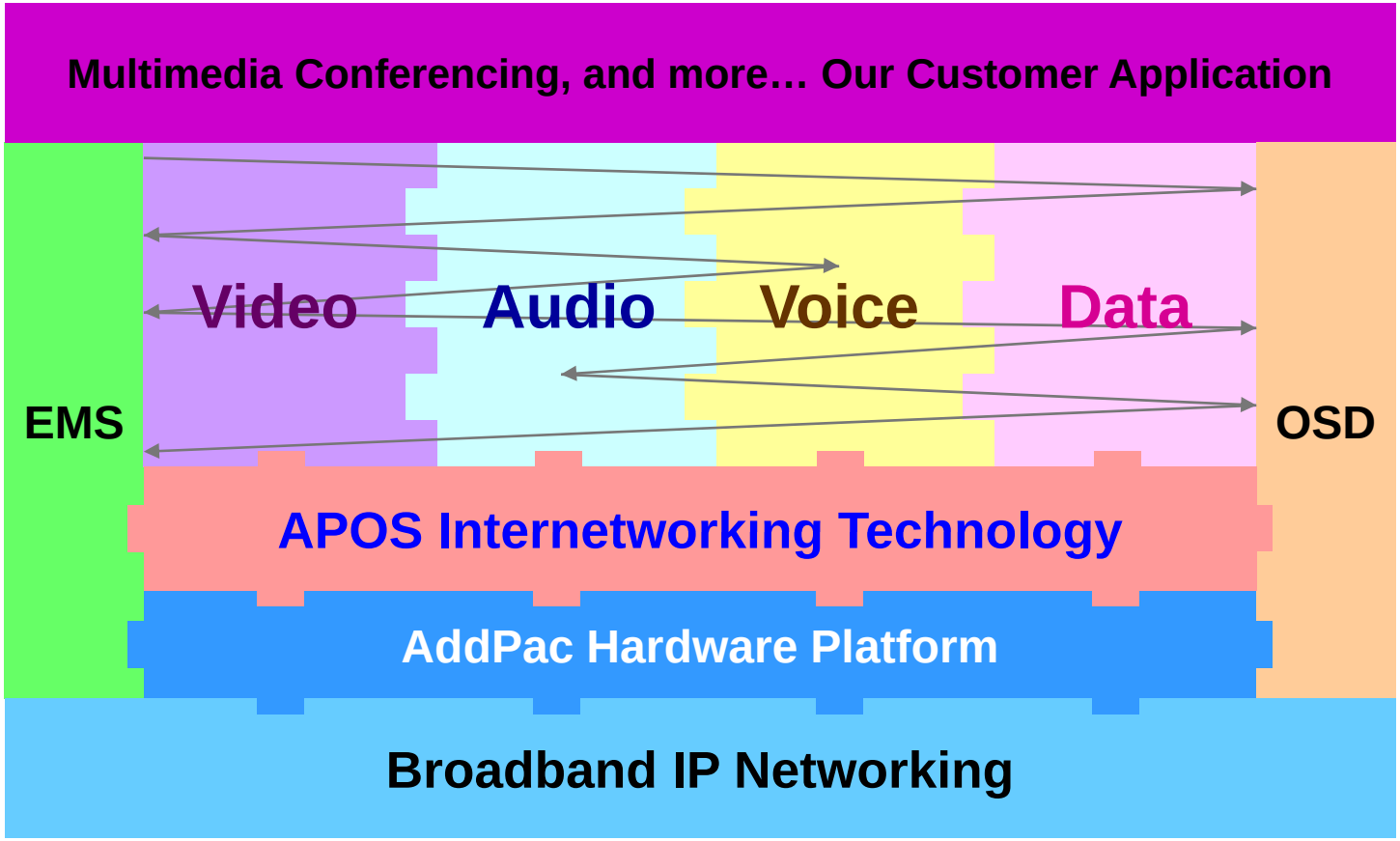

- APOS : AddPac Internetworking Operating System
- OSD : On- Screen Display
- EMS : Element Management System

Hardware Specification

AP-GS2500 Multi-Port GSM Gateway

RISC CPU

High-end DSP

- RISC Microprocessor Computing Power
- Three Module Slot for GSM, Analog Interface
- 4-Port GSM Module(AP-N1-GSM4UI)
  - 4-Port SIM Card Slot
  - 4-Port GSM Antenna Interface
  - Hot-Swap
- VoIP Interface Module
  - 8-Port FXS Module (AP-N1-FXS8)
  - 8-Port FXO Module (AP-N1-FXO8)
  - Digital E1/T1 Module (AP-N1-E1)
  - Hot-Swap
- Network Interface
  - -Two(2) 10/100Mbps Fast Ethernet (RJ45)
- RS232C Console Interface for CLI
- Run LED, LAN LED, Port LEDs
- Internal Power Supply



Hardware Specification

AP-GS2500 Multi-Port GSM Gateway

RISC CPU

High-end DSP

Hardware Specifications

AP-GS2500 GSM Gateway	Basic Specifications
GSM Interface	Four(4) GSM Module Slots
	AP-N1-GSM4, AP-N1-GSM4UI, AP-N1-FXS8, AP-N1-FXO8, AP-N1-FXS4O4, AP-N1-E1
Ethernet Interface	2-Ports 10/100Mbps Ethernet Interface(RJ-45)
Flash Memory	4Mbyte High-speed Flash Memory
Base Memory	64Mbyte High-speed SDRAM
Power Requirement	Power Supply / VAC 110~220V, 50/60Hz, 5V 15A, 12V 8A
Operating Temperature	0ºC ~ 45ºC (32 ºF ~ 122ºF)
Storage Temperature	-40ºC ~ 85ºC (-40ºC ~ 185ºF)
Relative Humidity	5% ~ 95% (Non-condensing)
Dimensions	H x W x D (56 x 440 x 313mm)
Weight(kg)	5Kg

Hardware Specification

AP-GS2500 Multi-Port GSM Gateway

RISC CPU

High-end DSP

Front Side View

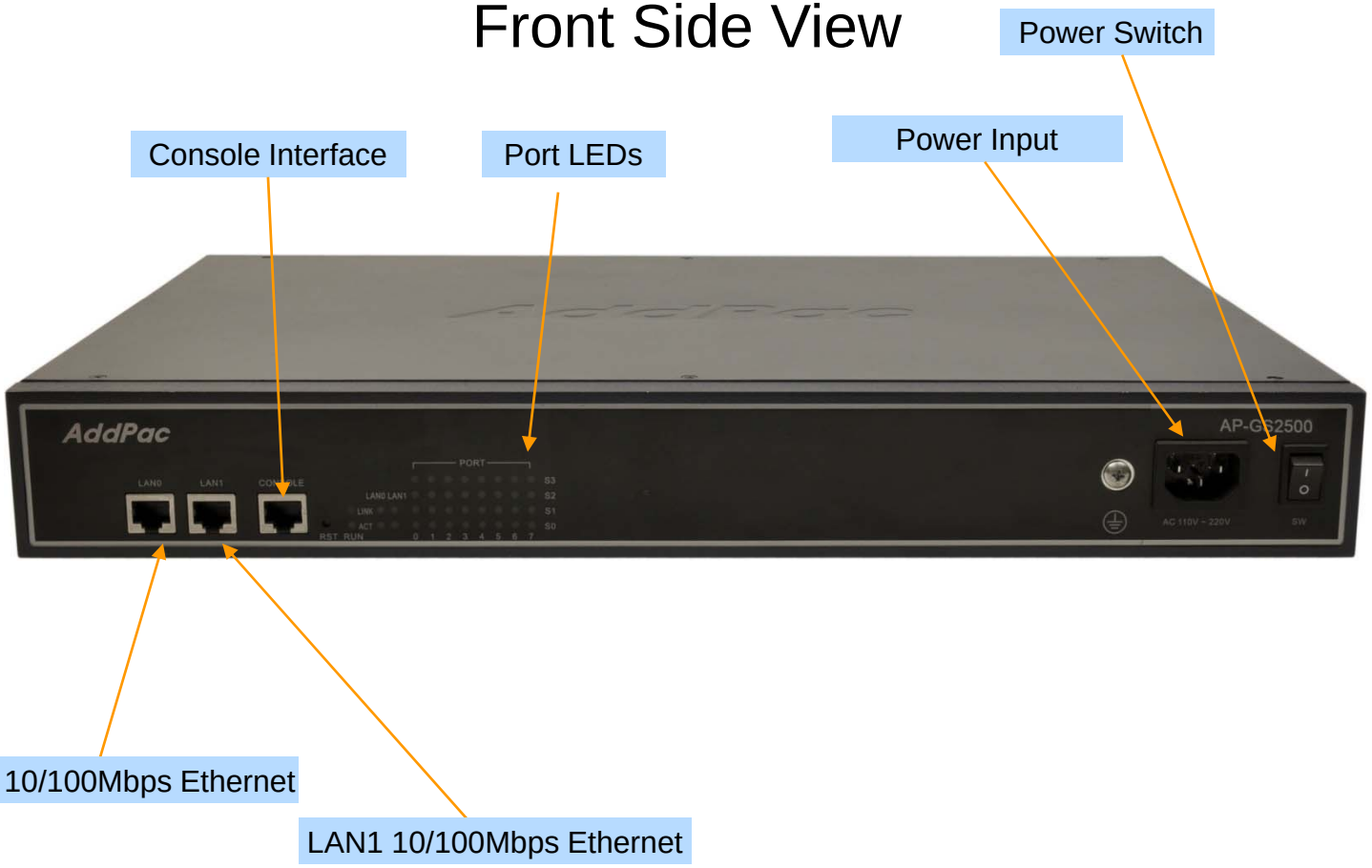

Hardware Specification

AP-GS2500 Multi-Port GSM Gateway

RISC CPU

High-end DSP

Back Side View (16-Port GSM)

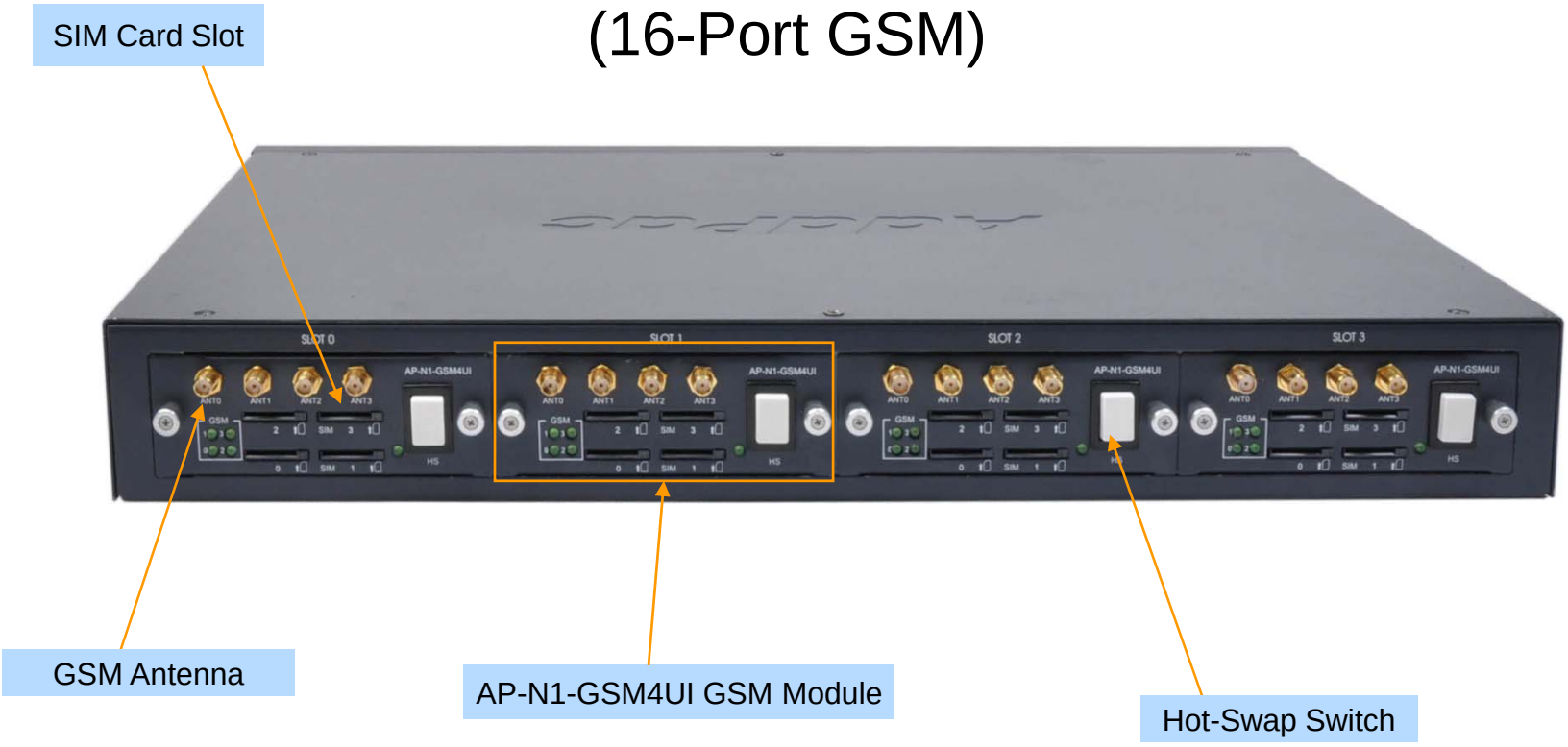

Hardware Specification

AP-GS2500 Multi-Port GSM Gateway

RISC CPU

High-end DSP

SIM Card Slot



AP-N1-GSM4UI
(4-Port GSM Module)

GSM Antenna

Port LEDs

Hot-Swap Switch

Hardware Specification

AP-GS2500 Multi-Port GSM Gateway

RISC CPU

High-end DSP



AP-N1-FXS8
(8-Port FXS Module)

AP-N1-FXO8
(8-Port FXO Module)

Hardware Specification

AP-GS2500 Multi-Port GSM Gateway

RISC CPU

High-end DSP

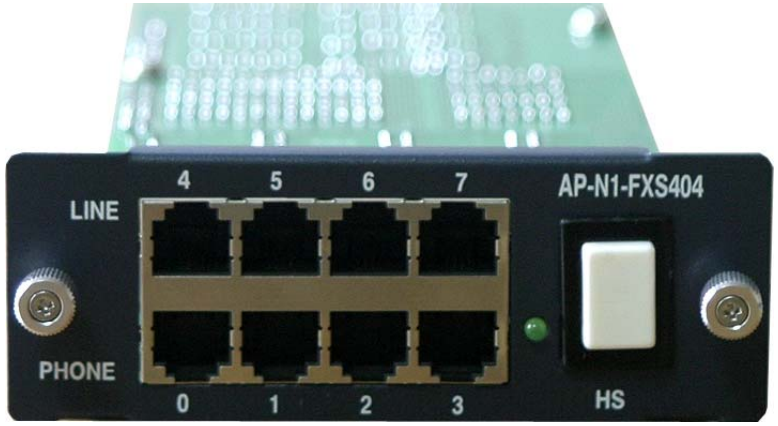

AP-N1-FXS4O4
(4-Port FXS-
4-Port FXO Module)



AP-N1-E1
(Digital E1/T1 Module)

Hardware Specification

AP-GS2500 Multi-Port GSM Gateway

RISC CPU

High-end DSP

GSM Gateway Service Diagram

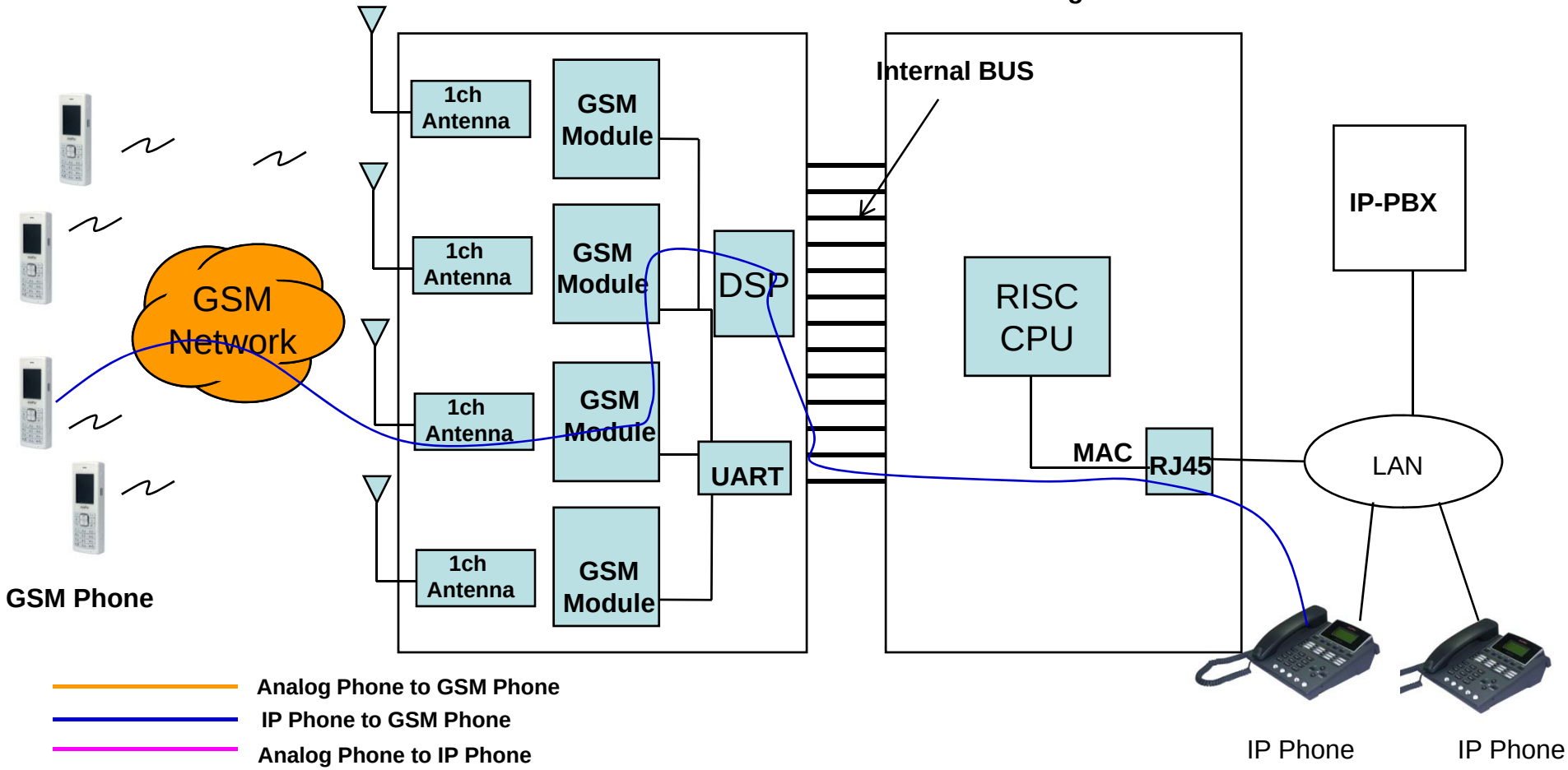

Hardware Specification

AP-GS2500 Multi-Port GSM Gateway

RISC CPU

High-end DSP

GSM Gateway Service Diagram

16-Port GSM Gateway Service Diagram

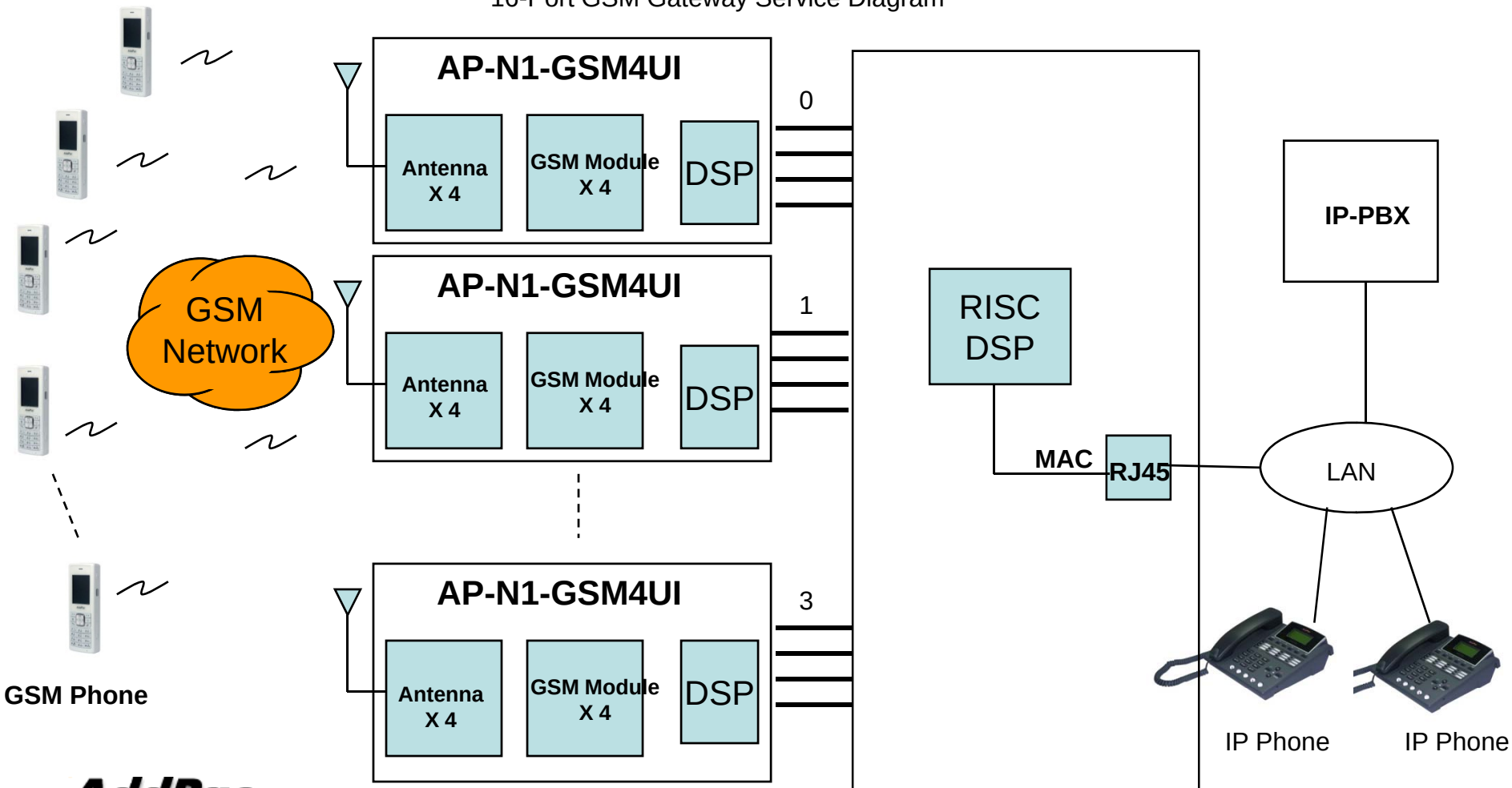

Hardware Specification

AP-GS2500 Multi-Port GSM Gateway

RISC CPU

High-end DSP

GSM Gateway Service Diagram

12-Port GSM + 8-Port FXS Gateway Service Diagram

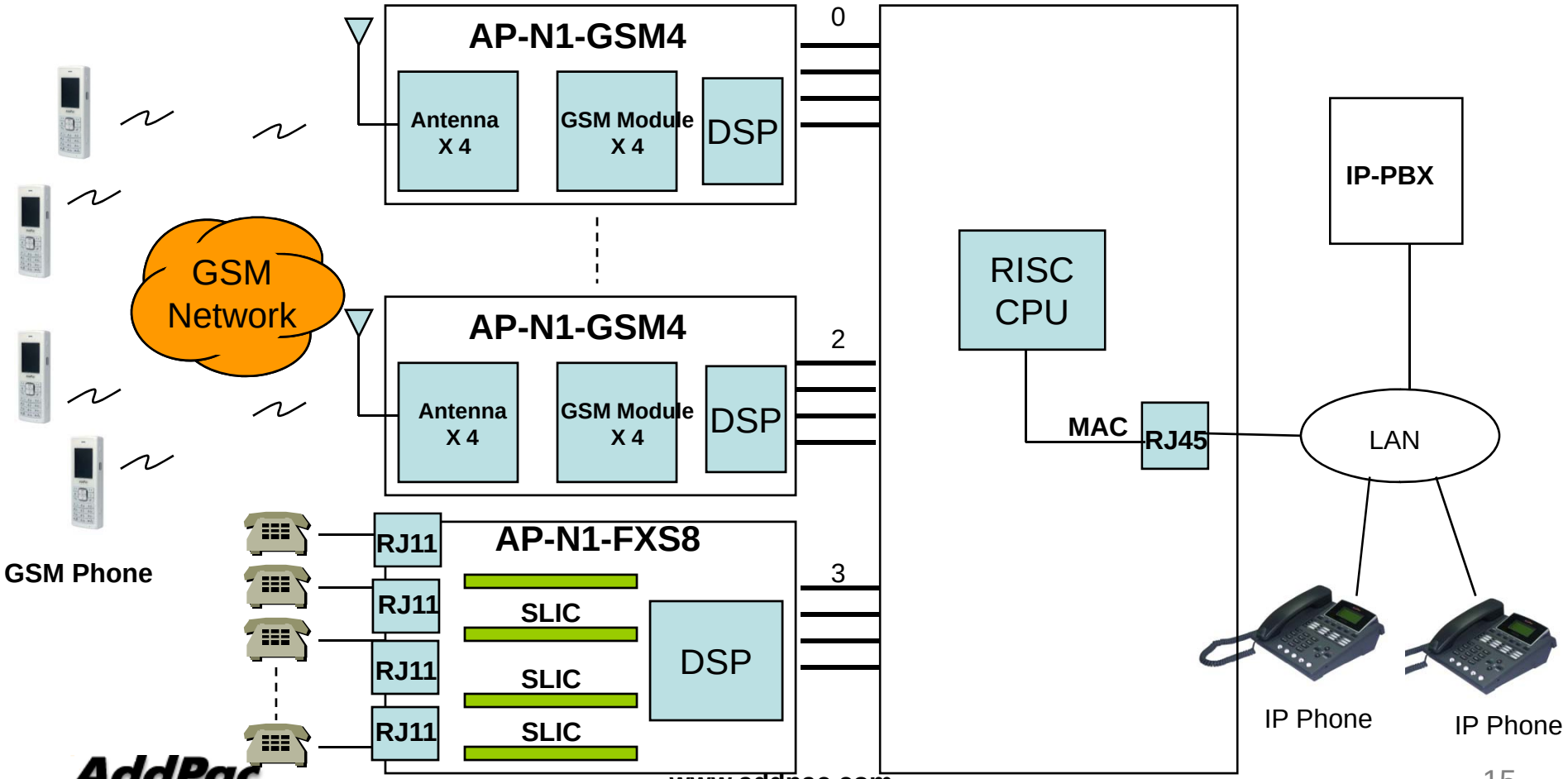

AP-N1-GSM4UI GSM Module Specification

AP-GS2500 Multi-Port GSM Gateway

- Bearers : GSM + GPRS multislot class 10
- Quad-Band EGSM 850/900/1800/1900MHz
- Normal Sensitivity
  - 850MHz Rx -102 dBm (min.) -110 dBm (typ)
  - 900MHz Rx -102 dBm (min.) -110 dBm (typ)
  - 1800MHz Rx -102 dBm (min.) -109 dBm (typ)
  - 1900MHz Rx -102 dBm (min.) -109 dBm (typ)
- Tx Performances
  - 850MHz Tx +33 dBm (max.)
  - 900MHz Tx +33 dBm (max.)
  - 1800MHz Tx +30 dBm (max.)
  - 1900MHz Tx +30 dBm (max.)
- Power Class 4 (33dBm nominal maximum output power)
- Codec
  - FR-EFR-HR-AMR

VoIP (Voice over IP) Service

AP-GS2500 Multi-Port GSM Gateway

- **H.323, SIP Dual Stack**
- **H.323**
  - **ITU-T Standard H.323 v3 Support**
  - **Support H.245 Tunneling**
  - **Including H.235 Security Features**
- **SIP**
  - **IETF RFC3261 or RFC2543 SIP Standard**

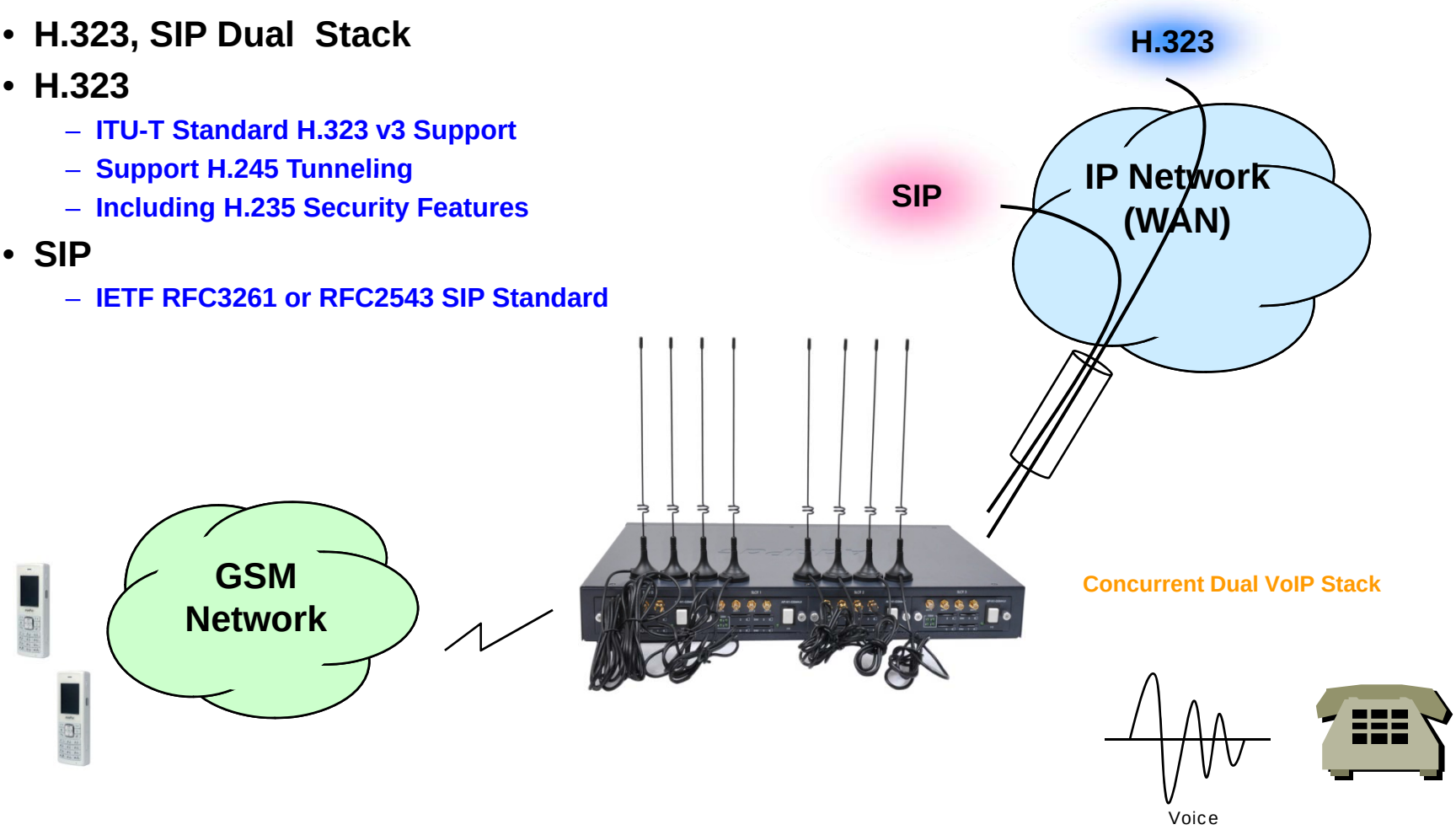

VoIP (Voice over IP) Service

AP-GS2500 Multi-Port GSM Gateway

- **H.323**
  - Fast connect, normal connect support
  - H.245 tunneling support
  - Q.931 response message setting for inbound VoIP calls
  - H.245 logical channel open timing selection function
  - Start H.245 procedure support
  - DTMF / Hook flash relay with H.245 alphanumeric / signal
  - Secondary gatekeeper support
  - Gatekeeper assignment according to the domain name
  - Gatekeeper discovery with multicast
  - Lightweight RRQ support
  - Signaling TCP port assignment
  - Resource threshold setting with RAI
  - H.235 clear-token, crypto-token support
  - canMapAlias support
  - Technical prefix (supported prefix) support
  - Public IP assignment in NAT environment
- **SIP**
  - Gateway-based / Endpoint-based registration support
  - Secondary proxy-server assignment function
  - SIP signaling port change function
  - SIP proxy server assignment according to the domain name
  - T.38 real-time fax relay support
  - DTMF relay support with RFC2833 / OPTION message
  - Re-INVITE support

VoIP (Voice over IP) Service

AP-GS2500 Multi-Port GSM Gateway

- **Voice Codec**
  - G.711 A-Law, G.711 U-Law
  - G.726 r16, G.726 r32
  - G.729A
  - G.723.1 r63, G.723.1 r53
  - VAD (Voice Activity Detection) function support
  - DTMF relay support (H.323, SIP, MGCP common) based on RFC2833
- **RTP**
  - Redundant RTP packet transmission in case of severe packet loss
  - Dynamic jitter buffer management and RPT packet jitter and loss compensation with heuristic & DSP error concealment
  - Static jitter buffer setting support
  - Voice frame per RTP packet number control for each codec
  - In-band ring-back tone support
  - Virtual ring-back tone support
  - Tone parameter change support

- **FAX**
  - Fax relay mode supporting T.38, inband-T.38, bypass mode
  - Lost packet compensation with redundant setting in case of T.38 fax relay
  - Fax relay mode, rate setting for remote end

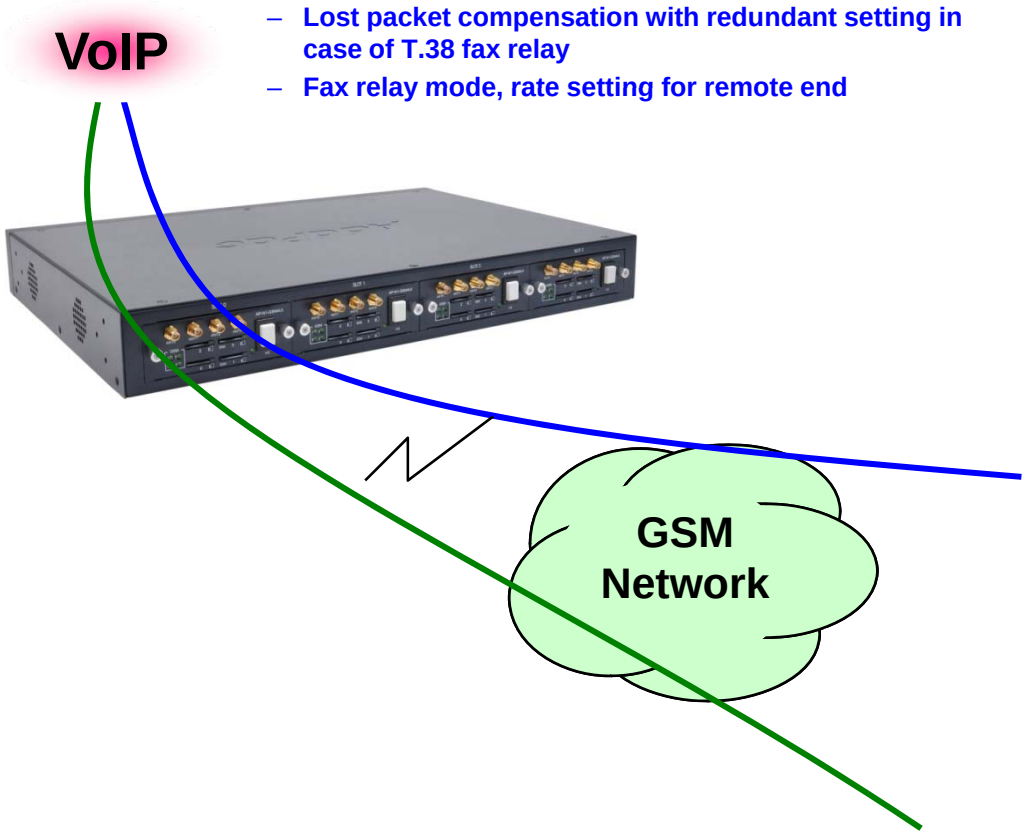

VoIP (Voice over IP) Service

AP-GS2500 Multi-Port GSM Gateway

- **VoIP Call Controls**
  - Hot line connection function with PLAR (Private Line Auto Ring Down)
  - Leased line emulation function
  - Connection monitoring function
  - Fault tolerant with Redundancy and Call Distribution among Gateways for load balancing
  - Call attempt with IP address
  - H.323, SIP, MGCP inbound call connection for each voice port
  - Multiple E.164 setting for one voice port
  - One E.164 or digit pattern can be assigned to more than one voice port
  - Hunting with Longest match/ priority/ sequence/ random
  - One stage call setup by Digit forwarding
  - Call barring with specific digit patterns
  - Calling and called number conversion for PSTN outbound calls
  - PSTN rerouting in case of VoIP call attempt failure

- **VoIP Call Controls (cont.)**
  - Call transfer for internal calls
  - Call pickup for internal calls
  - Calling and called number conversion for VoIP outbound calls
  - Calling and called number conversion for VoIP inbound calls
  - Fax broadcasting call control

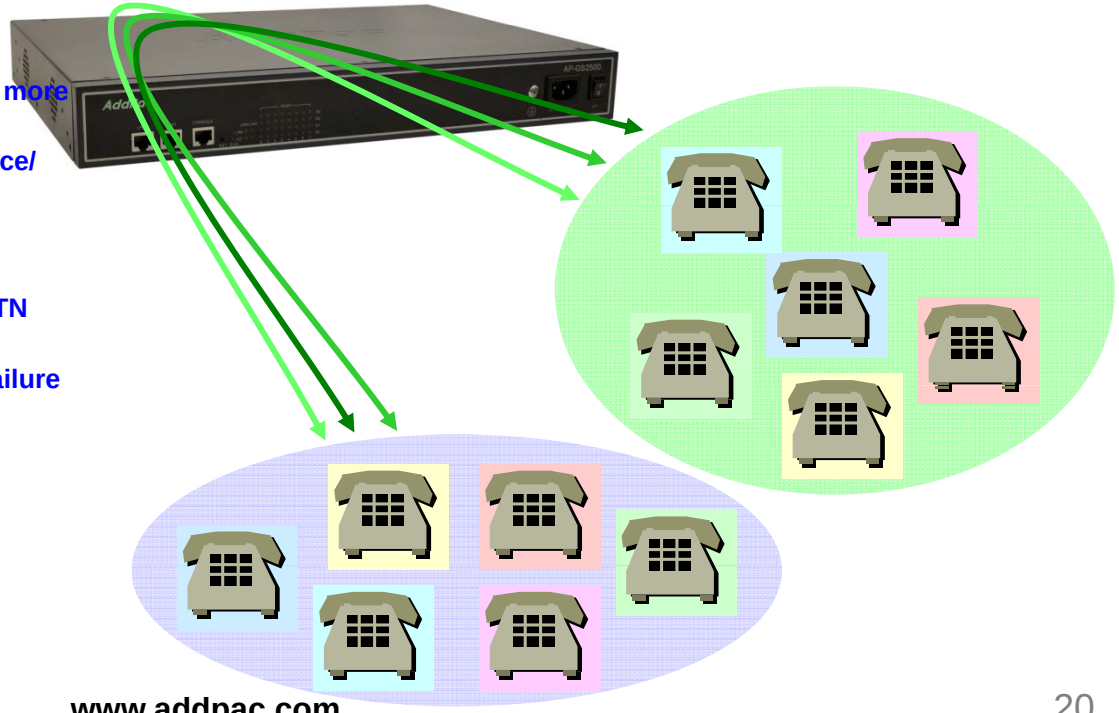

Advanced QoS Features

AP-GS2500 Multi-Port GSM Gateway

- **Enhances Transmit Voice QoS Features**
  - Voice Traffic Priority Queuing
  - QoS Service Profiling
  - Providing Virtual Network Transmit Algorithm
  - Real-time Voice Traffic QoS Support
  - RTP Packet Transmit Interval Control
  - Supporting RTP Packet Redundancy Scheme
  - IP Header Control such as ToS, Diffserv

- **Enhances Receive Voice QoS Features**
  - Dynamic Jitter Buffer Management
  - Error Concealment
  - Support T.38 FAX Data Error Recovery Scheme

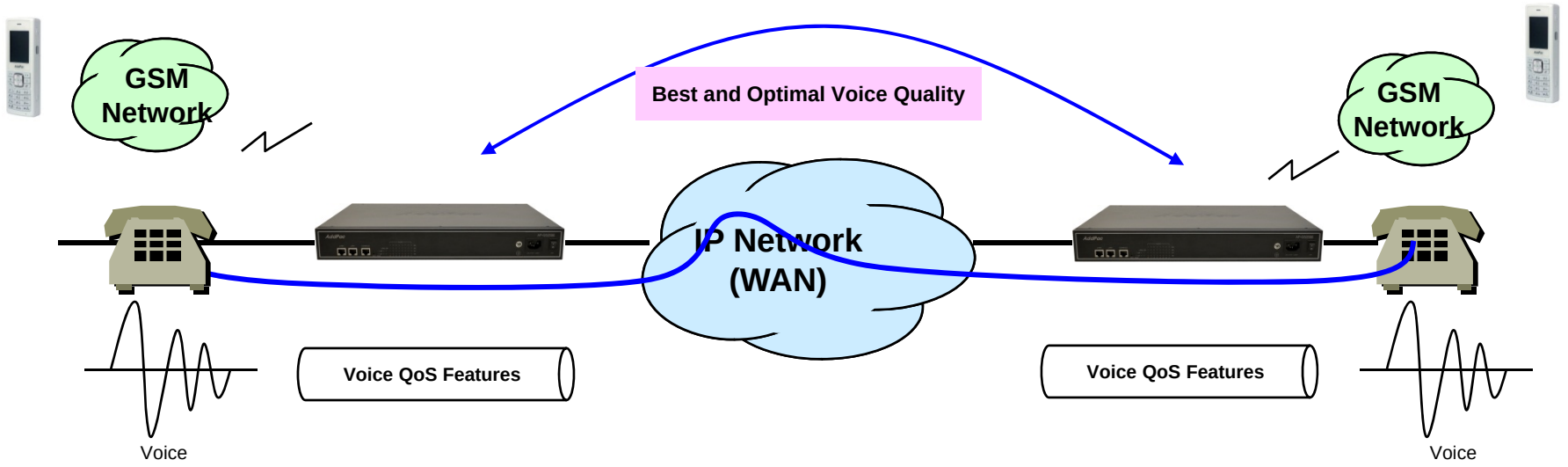

Network Protocols

AP-GS2500 Multi-Port GSM Gateway

Basic Network Protocols

- ARP, IPv4, TCP, UDP, ICMP, SCTP, IGMP, MLD

Routing Protocol

- IPv4 : Static

Service Protocol

- FTP, Telnet, TFTP, DHCP Server/Relay, SNMP Server
- CDP (Cisco Discovery Protocol)
- DNS Resolver , DDNS(nsupdate)
- Bridge
- Syslog

IPv4 Address Configuration

- Fixed (Static)
- DHCP
- PPPoE

Miscellaneous

-Cisco Style CLI
- Standard & Extended IPv4 Access List
- Multi-level User Account Management
- IP accounting
- STUN Client

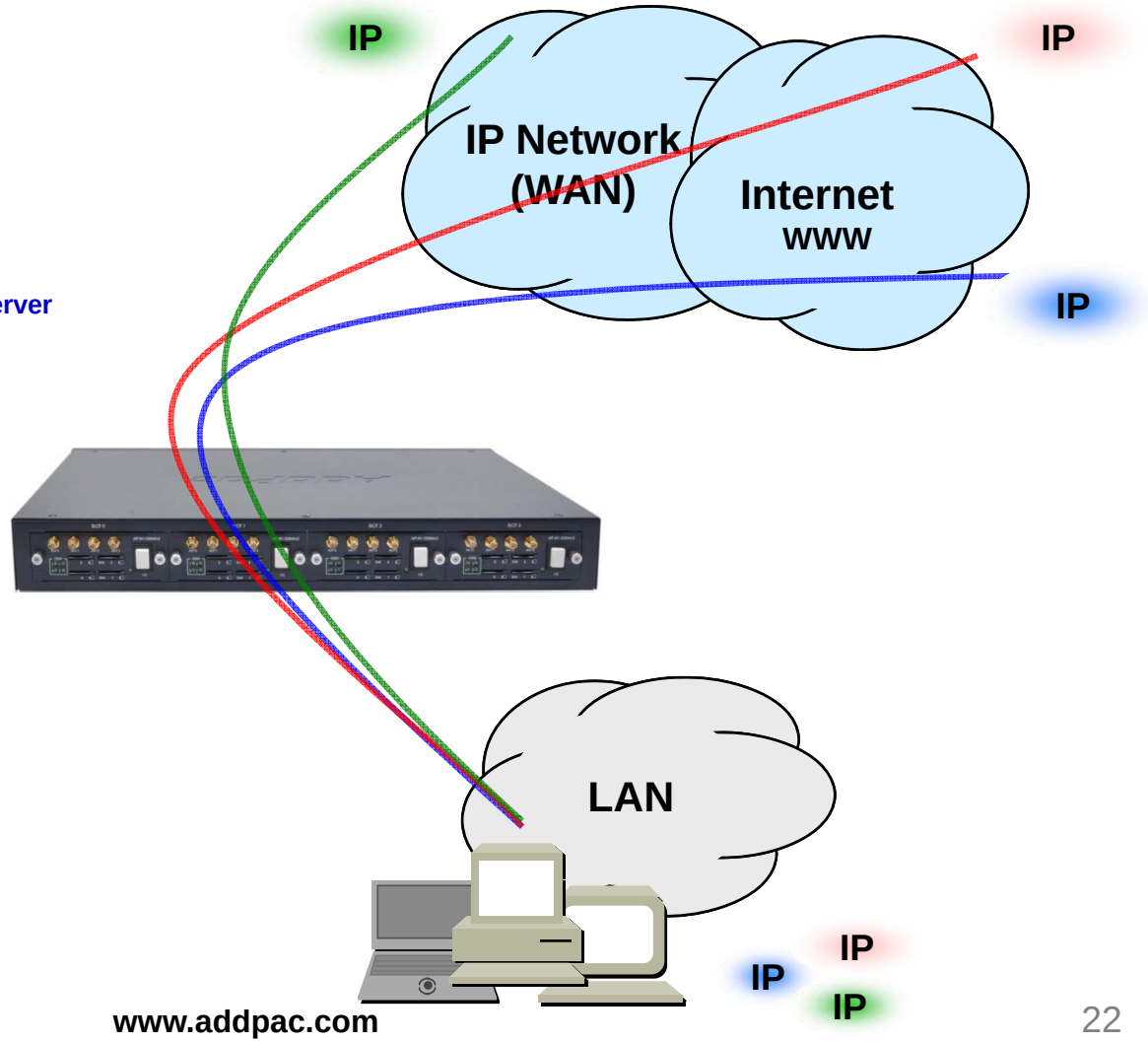

Network Management

AP-GS2500 Multi-Port GSM Gateway

- **SNMP**
  - Standard Simple Network Management Protocol(SNMP) Agent support
  - MIB v1 and v2 Support
- **Web-based Management**
  - Smart Easy Setup
  - Standard Voice Interface
  - Standard PSTN Back-up Interface
- **Watch-dog Function**
  - Hardware, Software watch-dog services
- **Remote Management**
  - Telnet
  - Rlogin
- **Auto Upgrade Service**
  - HTTP server based APOS image and configuration file auto-upgrade support
- **Batch Job Function**
  - Text based script downloading

- **Interoperable with AP-VPMS Service**
  - AddPac VoIP Plug & Play Management System (AP-VPMS)

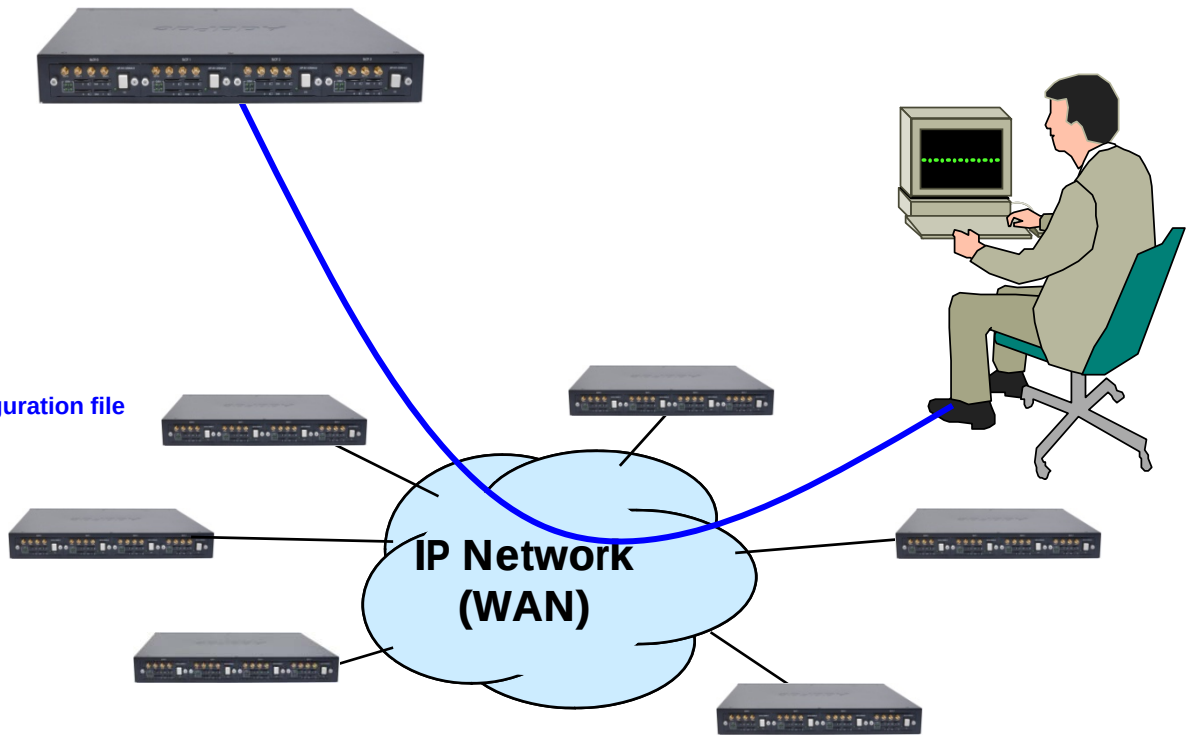

Smart Web Manager

AP-GS2500 Multi-Port GSM Gateway

- System Configuration
  - Network Setup, Language, NAT, PPTP, NTP
- Basic Configuration
  - Protocol, SIP Server , FXS Extension, GSM Extension
  - DTMF/CODEC, VoIP Dial Plan, GSM Dial Plan, Static Routing, Hot Line
- Advanced Configuration
  - Gain/CID, GSM PINs, FAX, Service, Filtering, Security
  - GSM Web Callback, GSM Callback
- Miscellaneous Configuration
  - Call Status, System Status, Alarm Status, GSM Status
  - Call Log, System Log, Ping, BTS Selection, GSM BTS Info
- LCR(Least Cost Routing)
  - Black & White List, Time Interval, Tariff Group, LCR Test
- SMS
  - Inbox, SMS New Message

Smart Web Manager : Main Page Layout

AP-GS2500 Multi-Port GSM Gateway

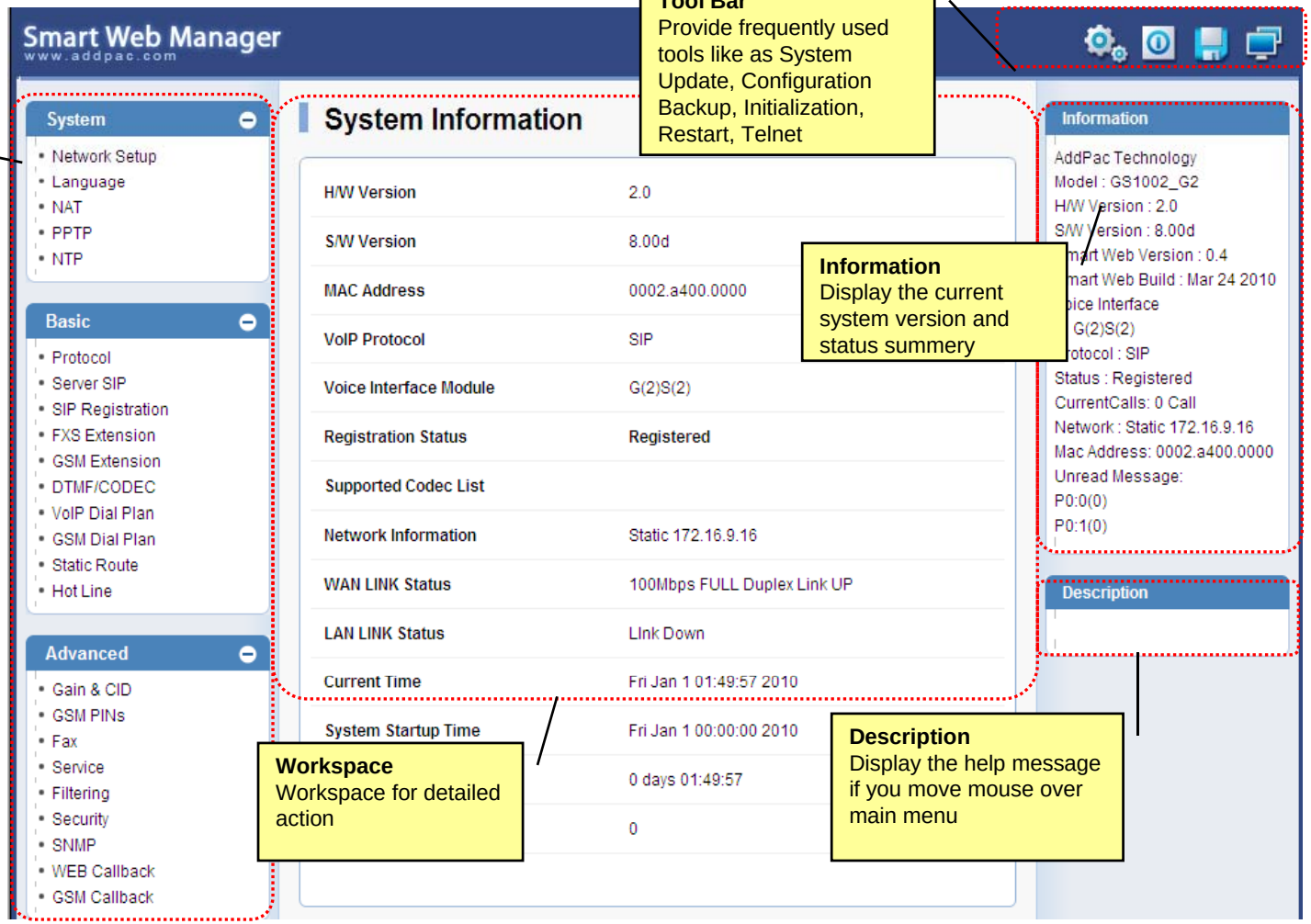

Main Menu
For easy system setup, provide the various menu and category

Tool Bar
Provide frequently used tools like as System Update, Configuration Backup, Initialization, Restart, Telnet

Information
Display the current system version and status summery

Workspace
Workspace for detailed action

Description
Display the help message if you move mouse over main menu

Smart Web Manager : System – Network Setup

AP-GS2500 Multi-Port GSM Gateway

Host Name
Create a representative name for the site to be installed

Static IP
This is static IP mode. Specify the addressed IP from the service provider

PPPoE
This is ADSL mode. This mode is used for addressing IP though authentication from the modem.
At this time, the modem must be configured in a way that the device can be authenticated.

DHCP
This is dynamic IP mode which is set at default. The IP can addressed from the external DHCP server.

VLAN
Configure VLAN mode and ID.

WAN Link
Controls and recognizes WAN port
Specify the connection speed of WAN port. connection automatically.

MAC
Change MAC address of WAN interface. Without address entry, use the basic MAC Address.

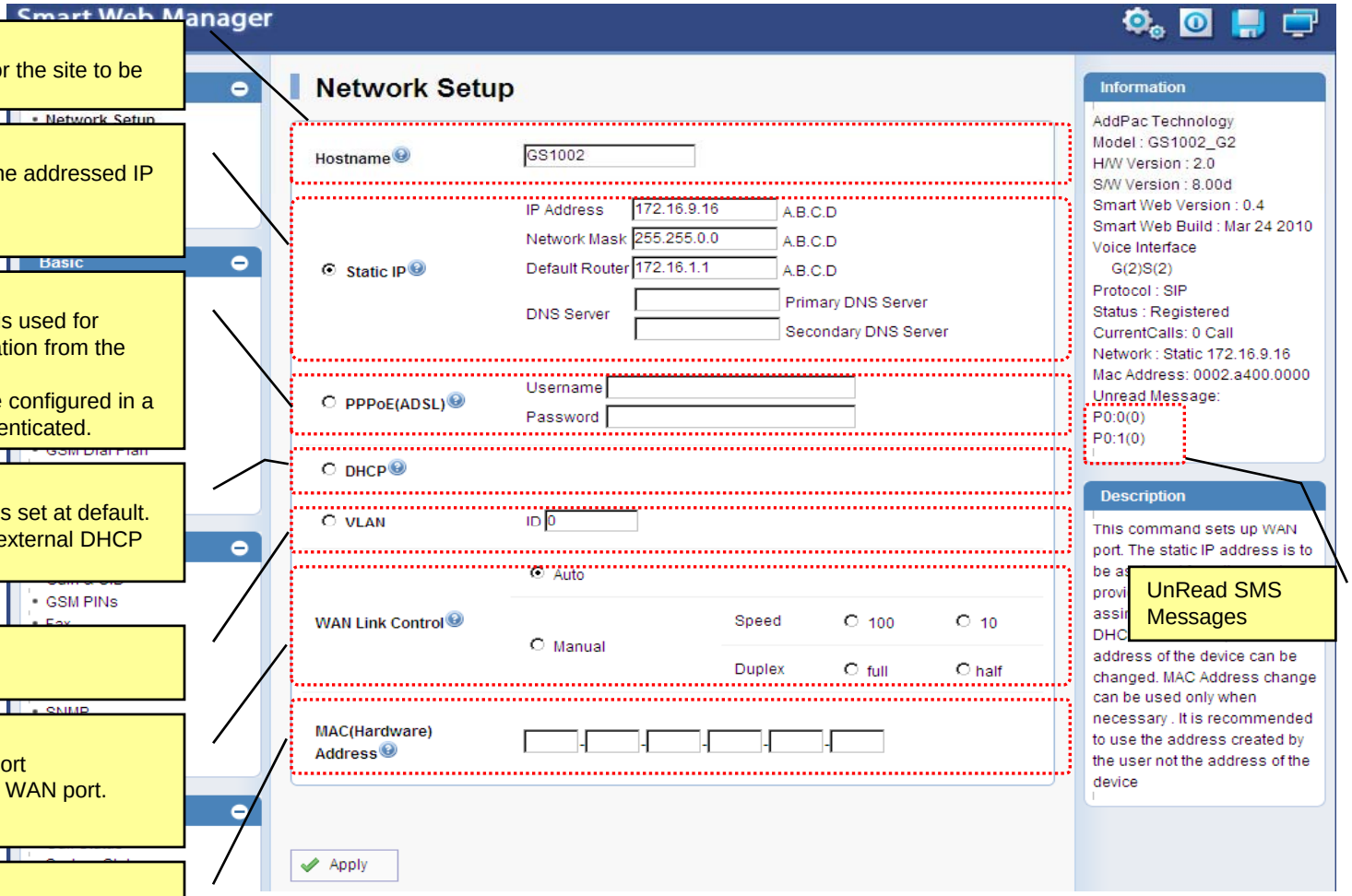

UnRead SMS Messages

Smart Web Manager : Basic – GSM Extension

AP-GS2500 Multi-Port GSM Gateway

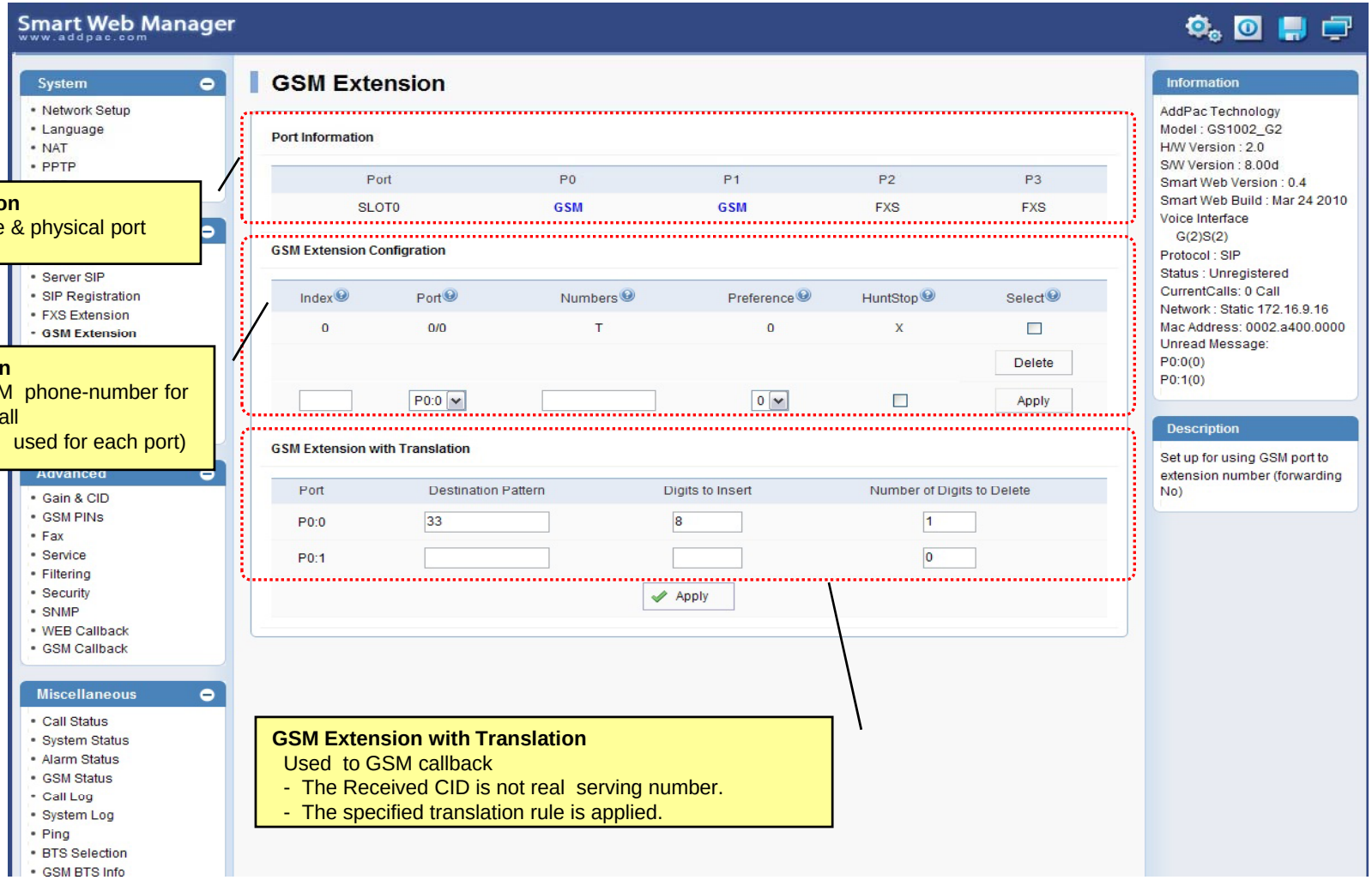

Port Information
voice port type & physical port

GSM Extension
Configure GSM phone-number for receiving a call
(usually 'T' is used for each port)

GSM Extension with Translation
Used to GSM callback
- The Received CID is not real serving number.
- The specified translation rule is applied.

Smart Web Manager : Miscellaneous – GSM BTS Info

AP-GS2500 Multi-Port GSM Gateway

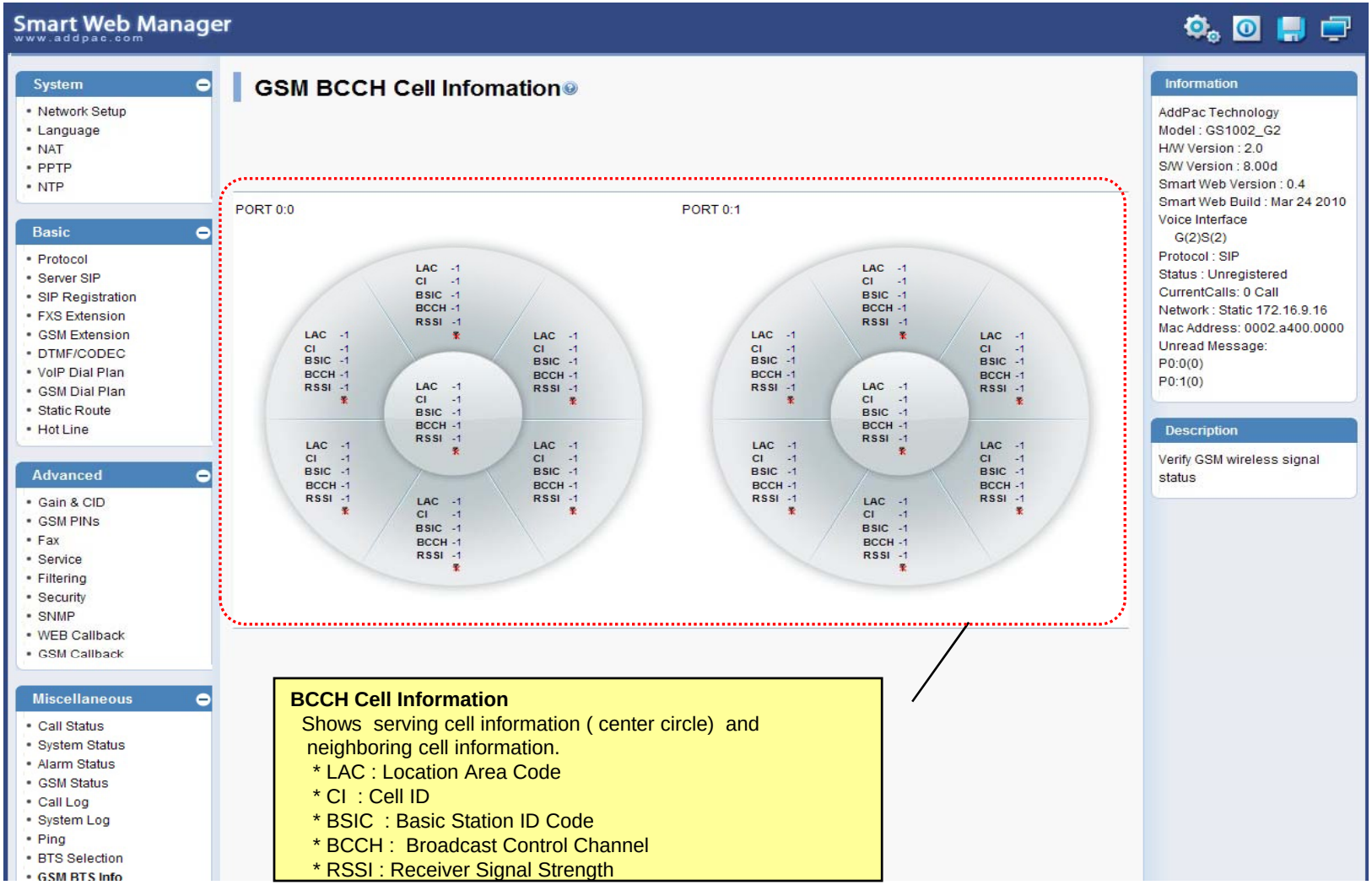

Security Management

AP-GS2500 Multi-Port GSM Gateway

- IP packet filtering
- IP access list
- User authentication function
  - Password Authentication Protocol (PAP)
  - Challenge Handshake Authentication Protocol (CHAP)
- Enable/Disable specific protocols
- Auto-square connect of Telnet session
- Account Management function for multi-level user
- SNMP/TELNET/FTP/HTTP/TFTP port assignment function
- SNMP/TELNET/FTP access list management
- Boot mode security checking function

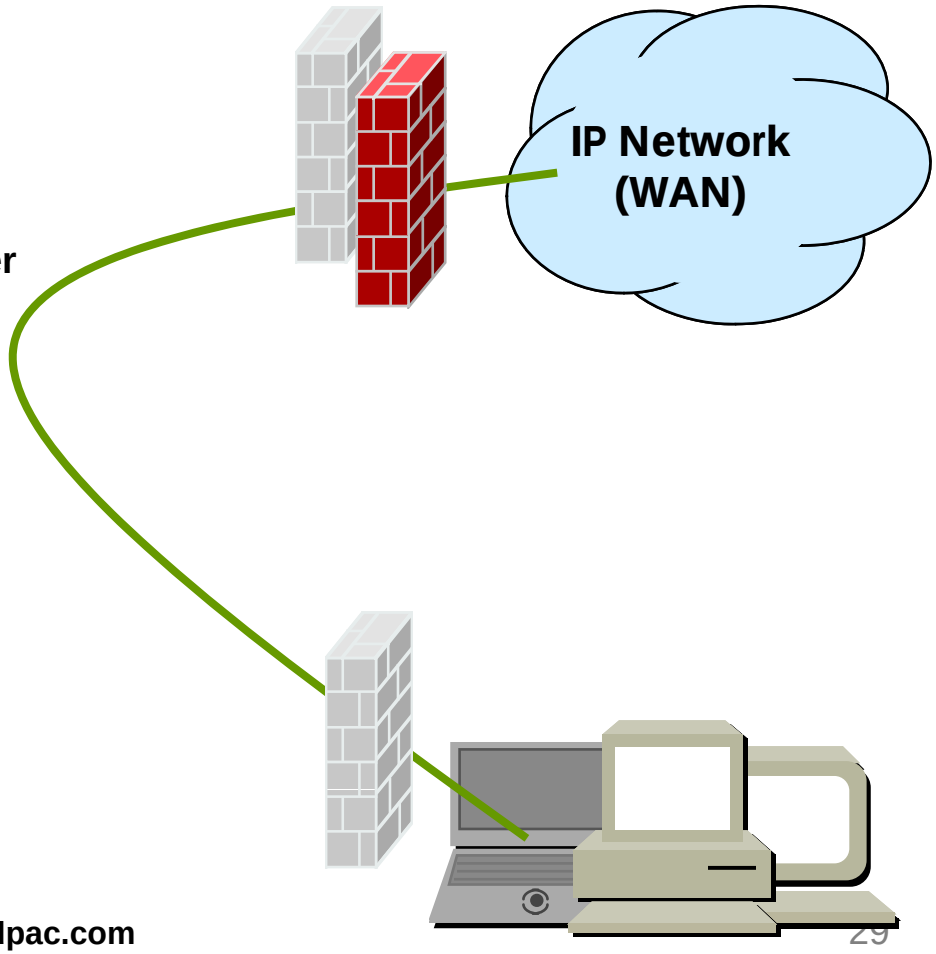

Standard Application

AP-GS2500 Multi-Port GSM Gateway

Network Diagram

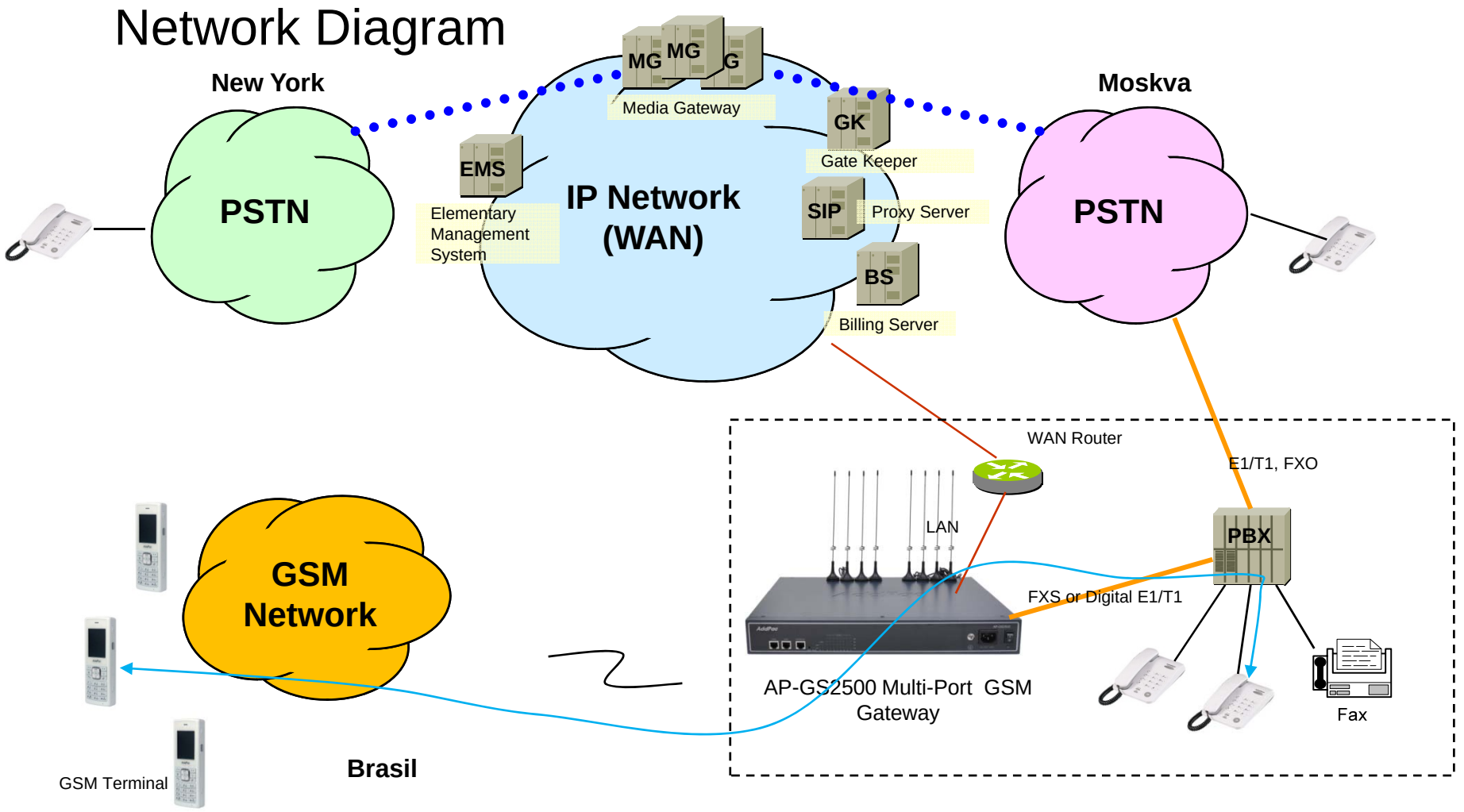

Ordering Information

- **AP-GS2500 GSM Gateway Hardware**
  - AP-GS2500 GSM Gateway Main Body (Four(4)Module Slots)
  - RISC Microprocessor with High-end Programmable DSP Architecture
  - 2-port 10/100Mbps Fast Ethernet(RJ45)
  - 1-Port RS232C Console Interface(RJ45)
  - Option Module : AP-N1-GSM4UI, AP-N1-FXS8, AP-N1-FXO8,etc
  - Including Network Cable, Antenna & Power Supply Cable, etc.
- **Built-in APOS Internetworking Software for AP-GS2500**
- **Including 1 Year Hardware Warranty**
- **Product Documents**
  - Install and Operation Guide (PDF)
- **Pricing**
  - AddPac Technology Regional Sales Manager
  - Authorized Sales and Marketing Representatives
  - Please Contact www.addpac.com

Thank you!

AddPac Technology Co., Ltd.
Sales and Marketing

Phone +82.2.568.3848 (KOREA)
FAX +82.2.568.3847 (KOREA)
E-mail sales@addpac.com