AV1200N
Video Codec Module

High-performance Network Surveillance Solution

D1/CIF Dual Video Encoding
Service Features for 3G Smart Phone



AddPac Technology

Sales and Marketing

www.addpac.com

Contents

- D1 Network DVR Service Diagram
- AP-NC1200, AP-NC1500, AP-NC3800 Platform
- AV1200N Main Features
- AV1200N Hardware Specification
- AV1200N RSTP Service
- Video Codec Service Features

D1 Network DVR Service Diagram

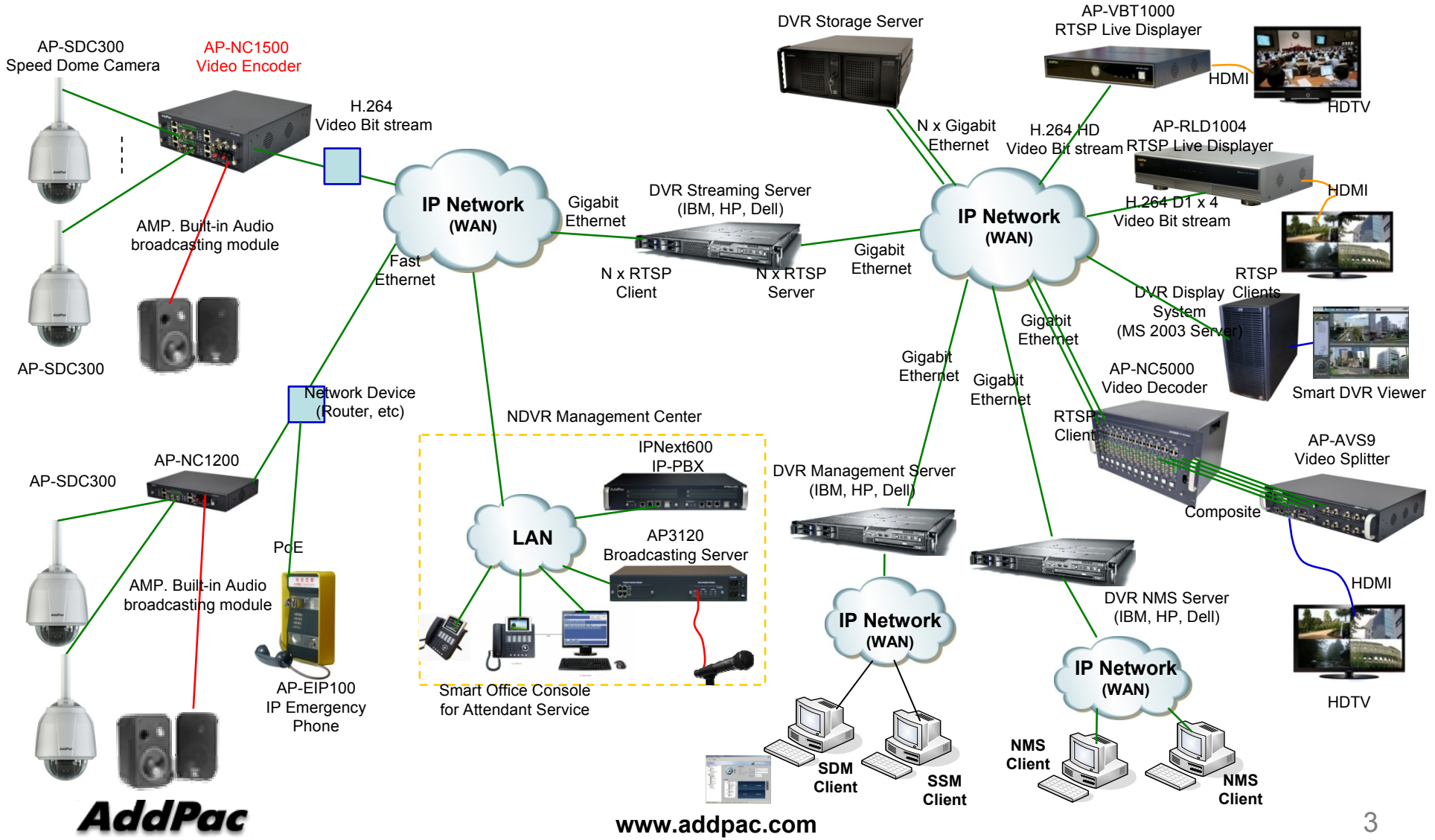

AP-NC1200, AP-NC1500, AP-NC3800 Platform

AP-NC1200, AP-NC1500, AP-NC3800 Platform

Model	AP-NC1200	AP-NC1500	AP-NC3800
			
Module Slot	1 Module 2 Card Slot	2 Module 4 Card Slots	12 Module Slots
Power Supply	External DC Power Supply	Internal Power Module (AC)	Internal Power Module (AC) Dual Power Supply Module
Power Type	Power Adaptor	Built-In	Module Type

AV1200N D1 Video Codec Modules

High-end DSP

Main Features

- IP based Audio/Video Encoding Solution
- Video Codec Support : H.264 BP/MP/HP
- One(1) Channel Video Input Interface
- Dual Encoding Service Support (D1, CIF)
- Up to D1 Video Resolution, 30frame/sec
- RTSP, TCP/UDP Protocol Support
- Multi-Session RTSP Server Service
- IP based Network Surveillance Solution
- High-performance Video, Audio, and Voice Service
- Firmware Upgradeable Architecture
- Video Solution with Outstanding Network Service Capability
- Audio/Video Privacy Protection
- Smart Web Interface

AV1200N D1 Video Codec Modules

High-end DSP

Hardware Specification

- High-end Video Processor Architecture
- Network Interface
  - One(1) 10/100Mbps Fast Ethernet (RJ45)
- Command Line Interface
  - One(1) RS-232C Interface (RJ45)
- Powerful Video Interface
  - Video Input : CVBS Video Input(BNC)
- High quality Audio Interface
  - One(1) Audio Stereo Input, Output channel
- Camera Control Interface
  - One(1) RS-232C, RS422, RS485 Interface for External Camera Control
- I/O Interface
  - 2 Alarm Input, 1 Relay Out

AV1200N D1 Video Codec Modules

Hardware Module Specification

AV1200N D1 Video Encoder Module (H.264)

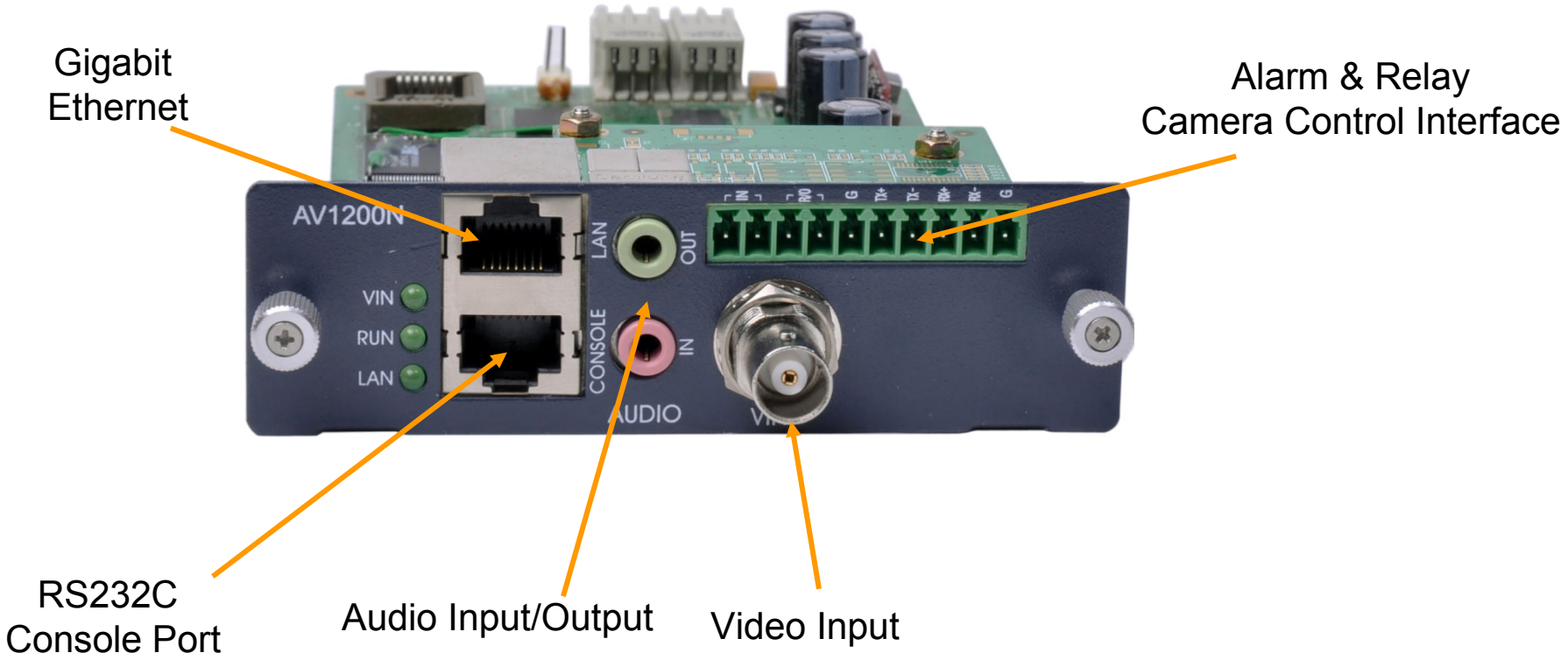

AV1200N D1 Video Codec Modules

High-end DSP

Dual Video Encoding Bit Stream Matrix

Video Input	Concurrent Video Encoding Bit Stream	
	CIF	D1
Analog Video Input (NSTC/PAL)	Available	Available

RTSP Service Network Diagram

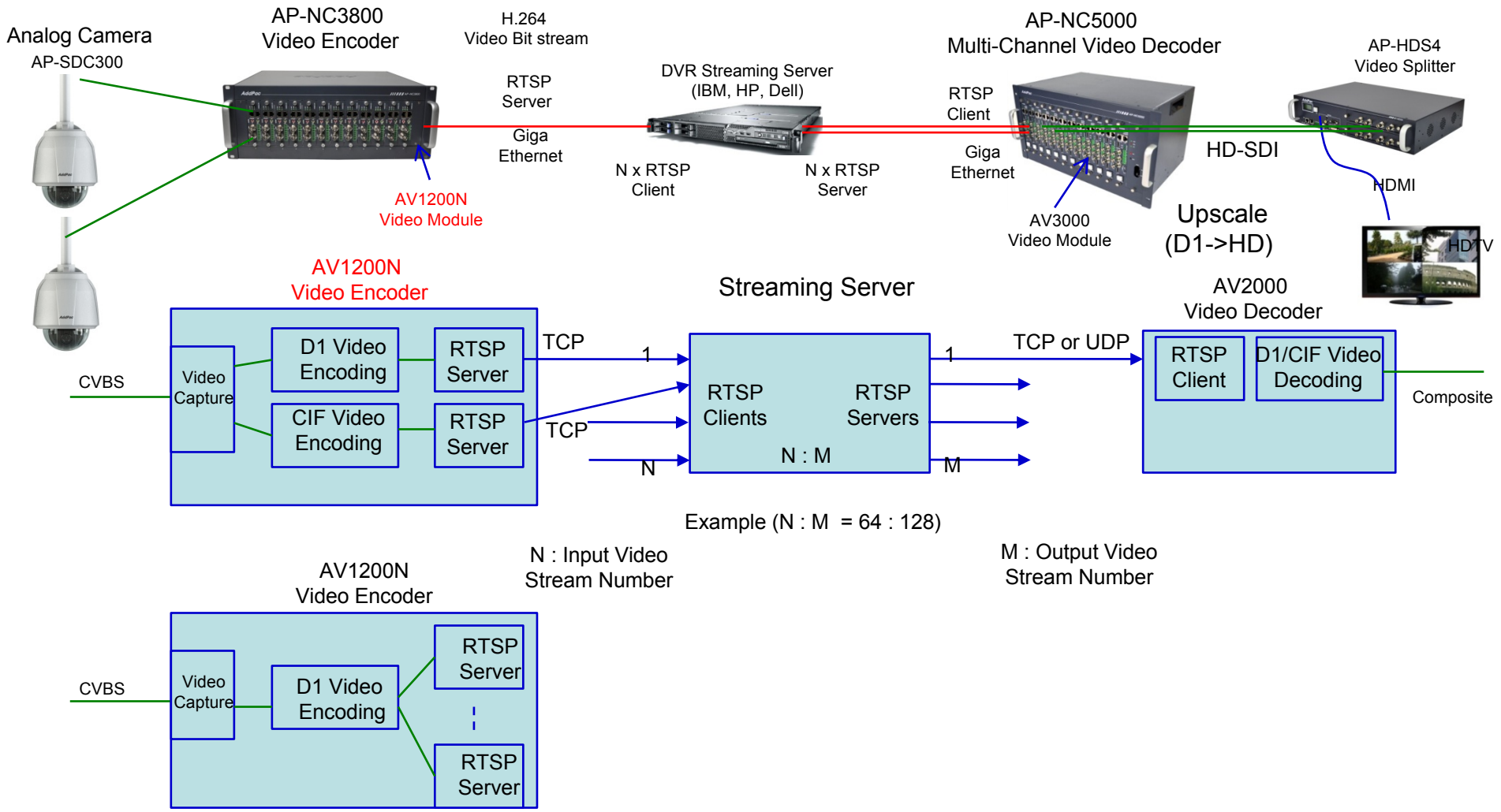

RTSP Service Features

- Video Encoder Mode
  - RTSP Server Mode
  - Multi-Channel RTSP Server Mode
    (D1, CIF Triple Video Encoding Mode, etc)
  - RTSP, TCP Protocol Support for Error Robust Service
- Video Decoder Mode
  - RTSP Client Mode
  - RTSP/TCP or RTSP/UDP Mode Support

Video Codec Service Features

- AV1200N Video Encoder Mode
  - H.264 D1(720x480) Single Encoding
  - H.264 CIF(352x288) Single Encoding
  - H.264 D1, CIF Dual Encoding

Video Codec Service Features

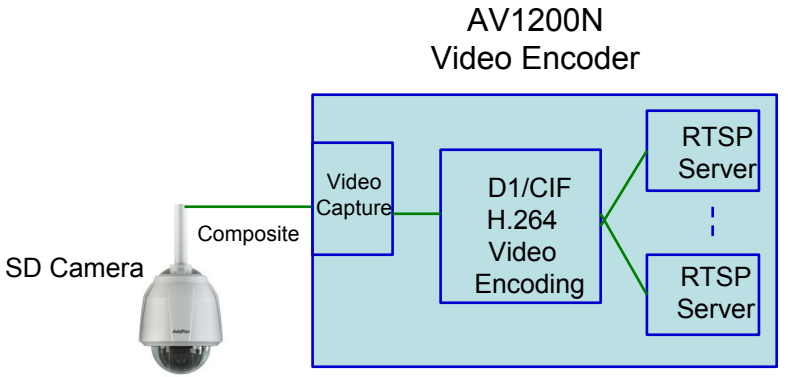

Single H.264 Video Encoding

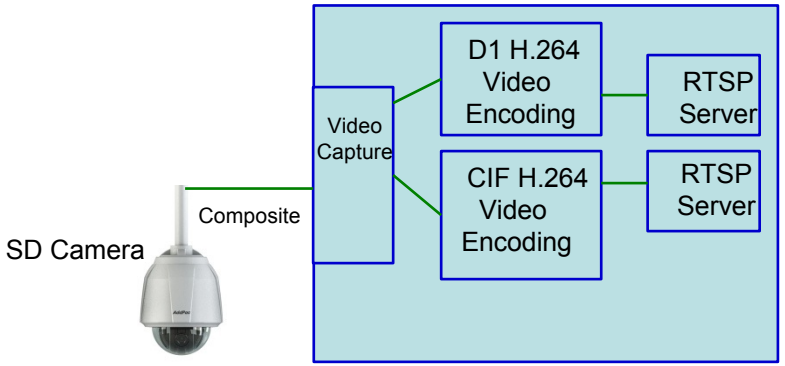

Dual H.264 Video Encoding

Video Codec Service Features

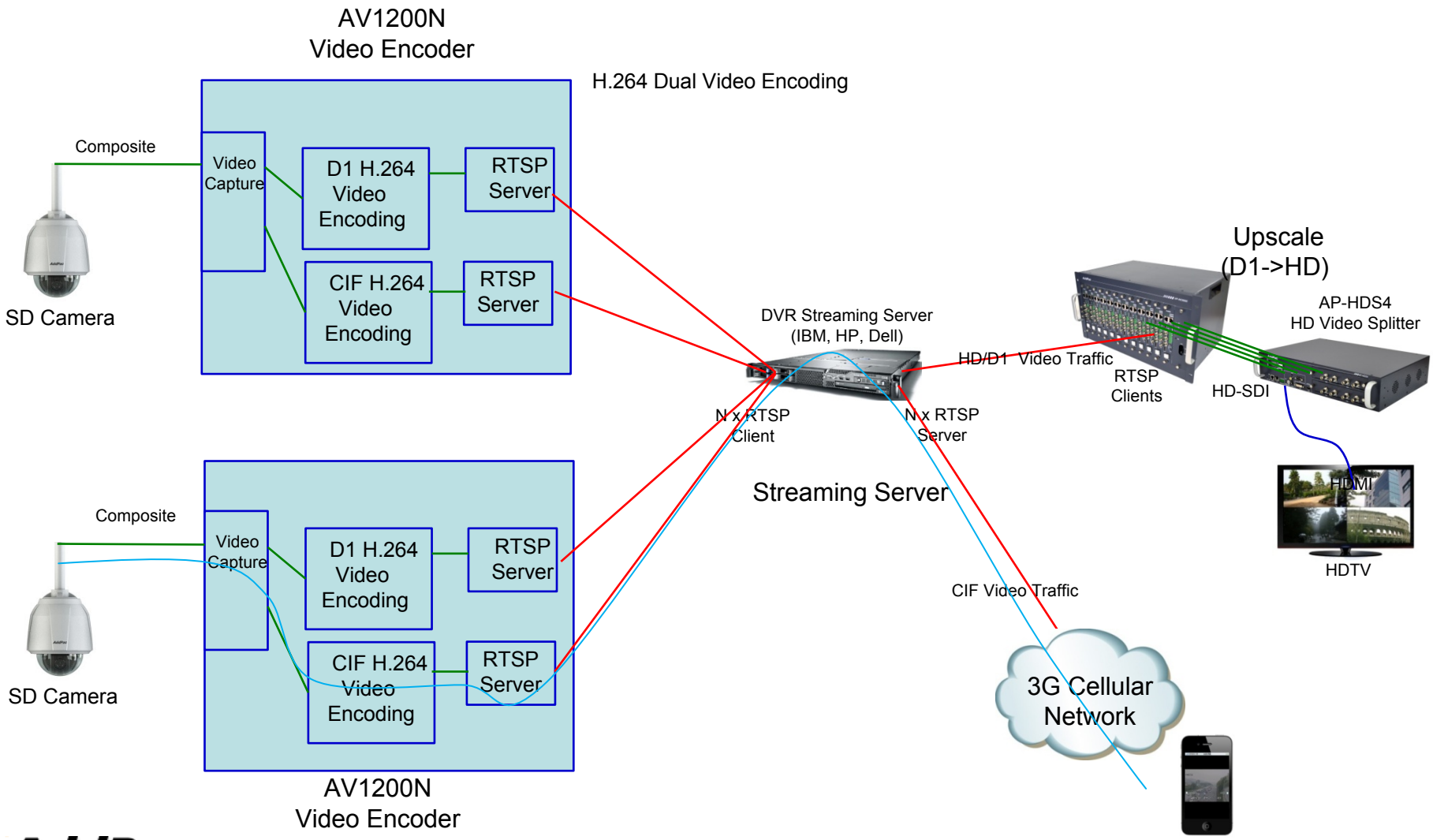

Thank you!

AddPac Technology Co., Ltd.
Sales and Marketing

Phone +82.2.568.3848 (KOREA)
FAX +82.2.568.3847 (KOREA)
E-mail sales@addpac.com