

AP6200 (80Port)
Large Scale VoIP Gateway
High Performance VoIP Gateway Solution

Product Overview



AddPac Technology

Sales and Marketing

www.addpac.com

Contents

- Product Overview
- Hardware Specification
- APOS Technology
- VoIP (Voice over IP) service
- Advanced QoS Features
- Network Protocols
- Network Management
- Security Management
- Application Service
- Ordering Information

Product Overview

AP6200 Large Scale VoIP Gateway

- H.323/SIP Concurrent Stack Embedded
- High Performance RISC & Programmable DSP Architecture
- Two(2) 10/100Mbps Fast Ethernet (IP Share ,etc)
- G.711/G.726/G.723/G.729, T.38 Fax , VAD, etc
- Powerful Network Protocols (PPPoE, DHCP, Static Routing, etc)
- Firmware Upgradeable Architecture
- NMS (Network Management System) for Large Scale Deployment
- Advanced Voice QoS Mechanism
- Module Type Dual Power Supply for Redundancy
- Ten(10) VoIP Module Slot
- Up to 80 Port Analog Interface Support
- Analog & Digital VoIP Modules

Product Highlights

AP6200 Large Scale VoIP Gateway



State-of-art Signaling
H.323, SIP
Concurrent Signaling Stack

NMS Large Scale VoIP
Gateway Management Support

Ten(10) VoIP Module Slots

High Performance RISC CPU
+ Programmable DSP

Excellent Voice Quality
G.729/G.723/G726/G711

Module Type
8-Port VoIP Cards,
Digital E1,T1 Cards
Hot-Swap

Broadband IP Networking
With dual 10/100Mbps
Fast Ethernet

APOS™ Technology
Firmware Upgradeable Architecture

Module Type
Dual Power Supply

Powerful Network Protocol
Support

Advanced Voice
Traffic QoS Mechanism

Powerful Trouble Shooting &
Debugging Feature Support

APOS Technology

AP6200 Large Scale VoIP Gateway

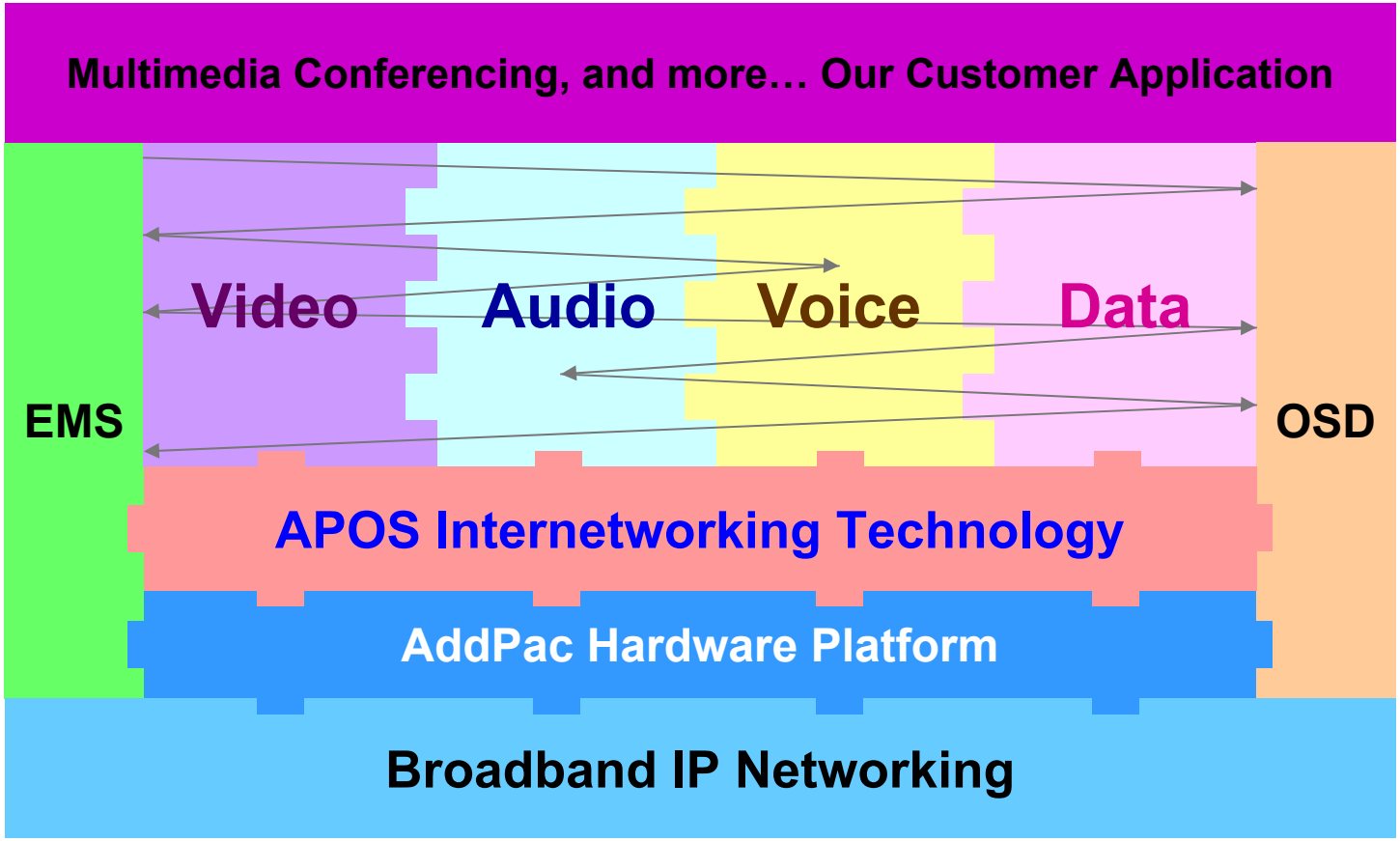

- APOS : AddPac Internetworking Operating System
- OSD : On- Screen Display
- EMS : Element Management System

Hardware Specification

AP6200 Large Scale VoIP Gateway

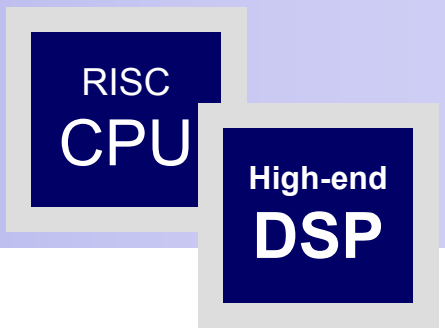

- RISC Microprocessor Computing Power
- Ten(10) VoIP Module Slots (Hot-Swap)
  - One(1)-Port Digital E1/T1 Card
  - Two(2)-Port Digital E1/T1 Card
  - 8-Port FXS Analog Interface Card
  - 8-Port FXO Analog Interface Card
- Network Interface
  - Two(2) 10/100Mbps Fast Ethernet (RJ45)
- RS232C Console Interface
- Run LED, LAN LED, Port LEDs
- Module Type Dual Power Supply (Option)

Hardware Specification

AP6200 Large Scale VoIP Gateway

Hardware Specifications

AP6200 Large Scale VoIP Gateway	Basic Specifications
PSTN Voice Interface	Ten(10) VoIP Module Slots, One(1) CPU Module Solt
	AP-N1-FXS8, AP-N1-FXO8, AP-N1-FXS4O4, AP-N1-E1, AP-N1-2E1
Ethernet Interface	2-Ports 10/100Mbps Ethernet Interface(RJ-45)
Flash Memory	512Mbyte NAND Flash Memory
Main Memory	128Mbyte High-speed DDR2
Power Requirement	Power Supply / VAC 110~220V, 50/60Hz, 5V 30A, Dual Power Supply for Redundancy
Operating Temperature	0ºC ~ 45ºC (32 ºF ~ 122ºF)
Storage Temperature	-40ºC ~ 85ºC (-40ºC ~ 185ºF)
Relative Humidity	5% ~ 95% (Non-condensing)
Dimensions	H x W×D (180mm x 440mm x 340mm)
Weight(kg)	12.7Kg

Hardware Specification

AP6200 Large Scale VoIP Gateway

RISC CPU DSP

Front Side

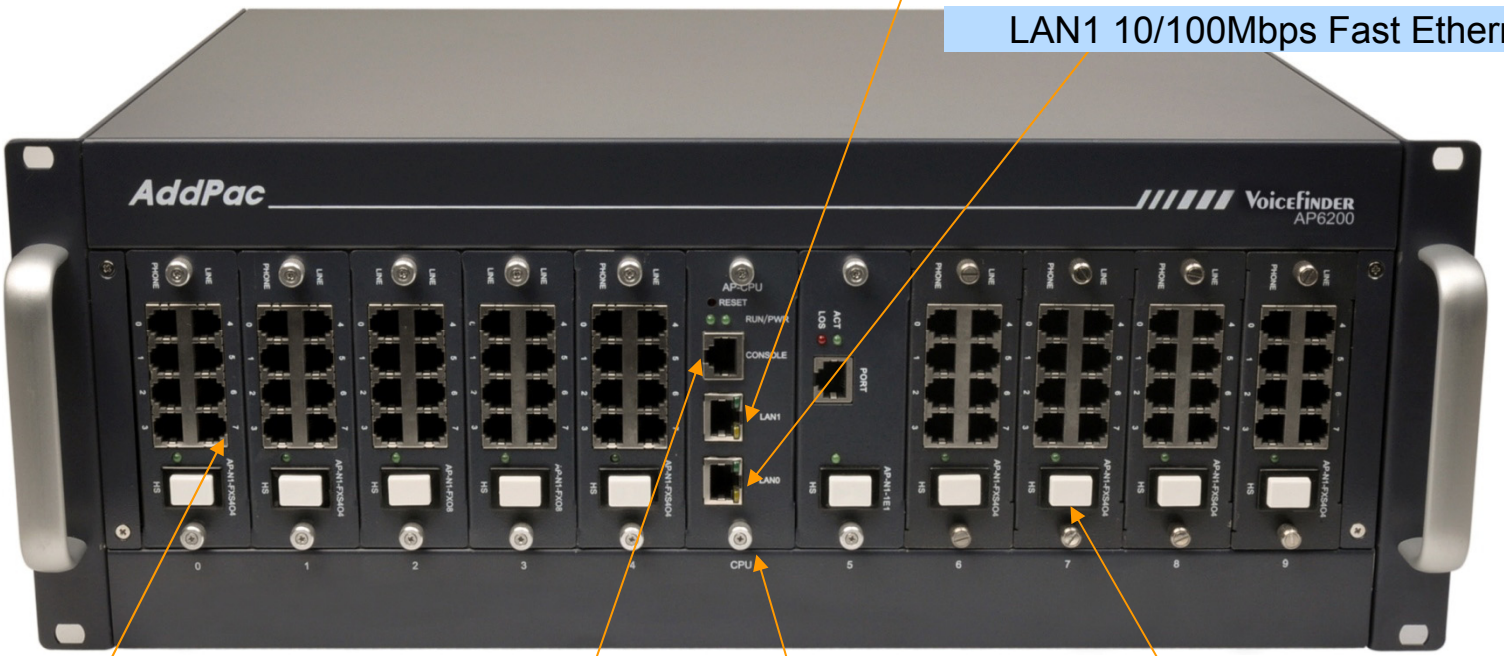

LAN0 10/100Mbps Fast Ethernet

LAN1 10/100Mbps Fast Ethernet

8-Port FXS VoIP Modules

Console Interface

CPU Module

Hot-Swap Switch

Hardware Specification

AP6200 Large Scale VoIP Gateway

RISC CPU DSP

Back Side



Hardware Specification

AP6200 Large Scale VoIP Gateway

RISC CPU DSP

VoIP Modules

AP-N1-FXS8 8-Port FXS Module	
AP-N1-FXO8 8-Port FXO Module	
AP-N1-FXS4O4 4-Port FXS&4-Port FXO Module	
AP-N1-E1 1-Port Digital E1/T1 Module	
AP-N1-2E1 2-Port Digital E1/T1 Module	

Hardware Specification

AP6200 Large Scale VoIP Gateway

RISC CPU DSP

VoIP Modules



AP-N1-FXS8
(8-Port FXS Module)

AP-N1-FXO8
(8-Port FXO Module)

Hardware Specification

AP6200 Large Scale VoIP Gateway

RISC CPU DSP

VoIP Modules

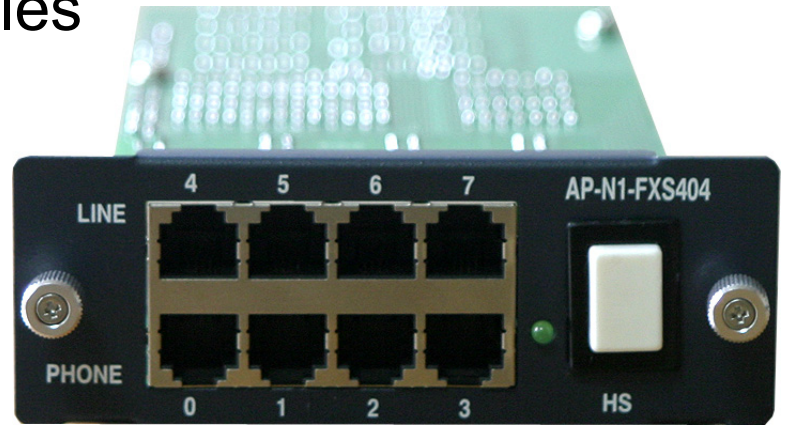

AP-N1-FXS4O4
(4-Port FXS-
4-Port FXO Module)

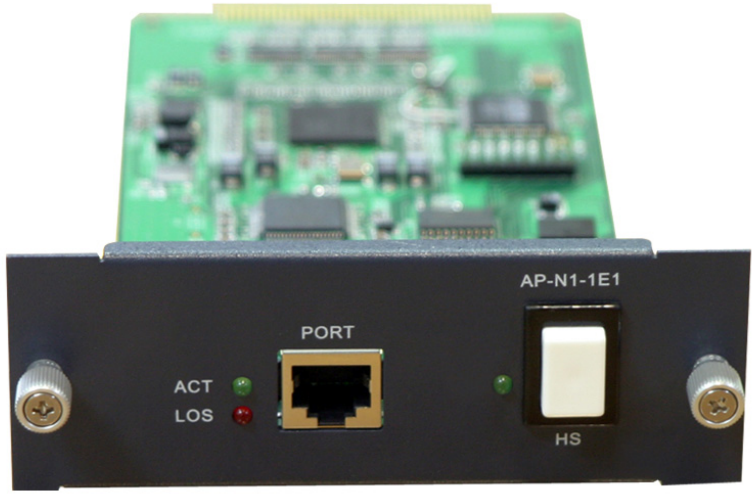

AP-N1-E1
(Digital E1/T1 Module)

Hardware Specification

AP6200 Large Scale VoIP Gateway

RISC CPU DSP

VoIP Modules

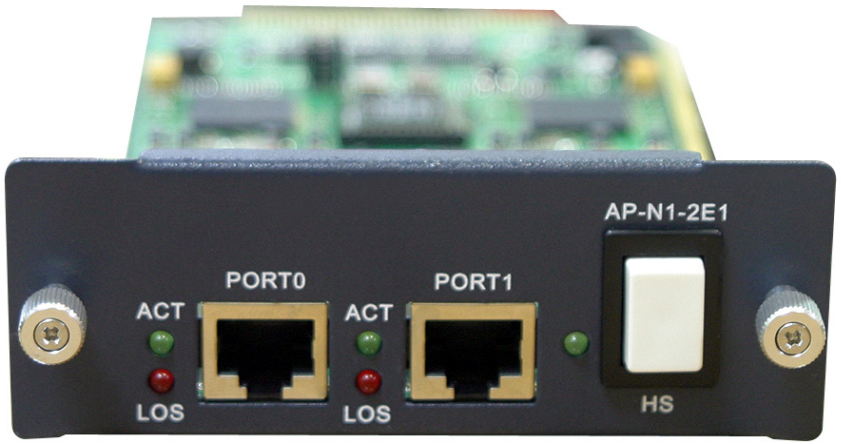

AP-N1-2E1
(Digital E1/T1 Module)

Hardware Specification

AP6200 Large Scale VoIP Gateway

RISC CPU

High-end DSP

VoIP Module Combination Diagram

80-Port FXS(8x10Module) VoIP Gateway Service Diagram

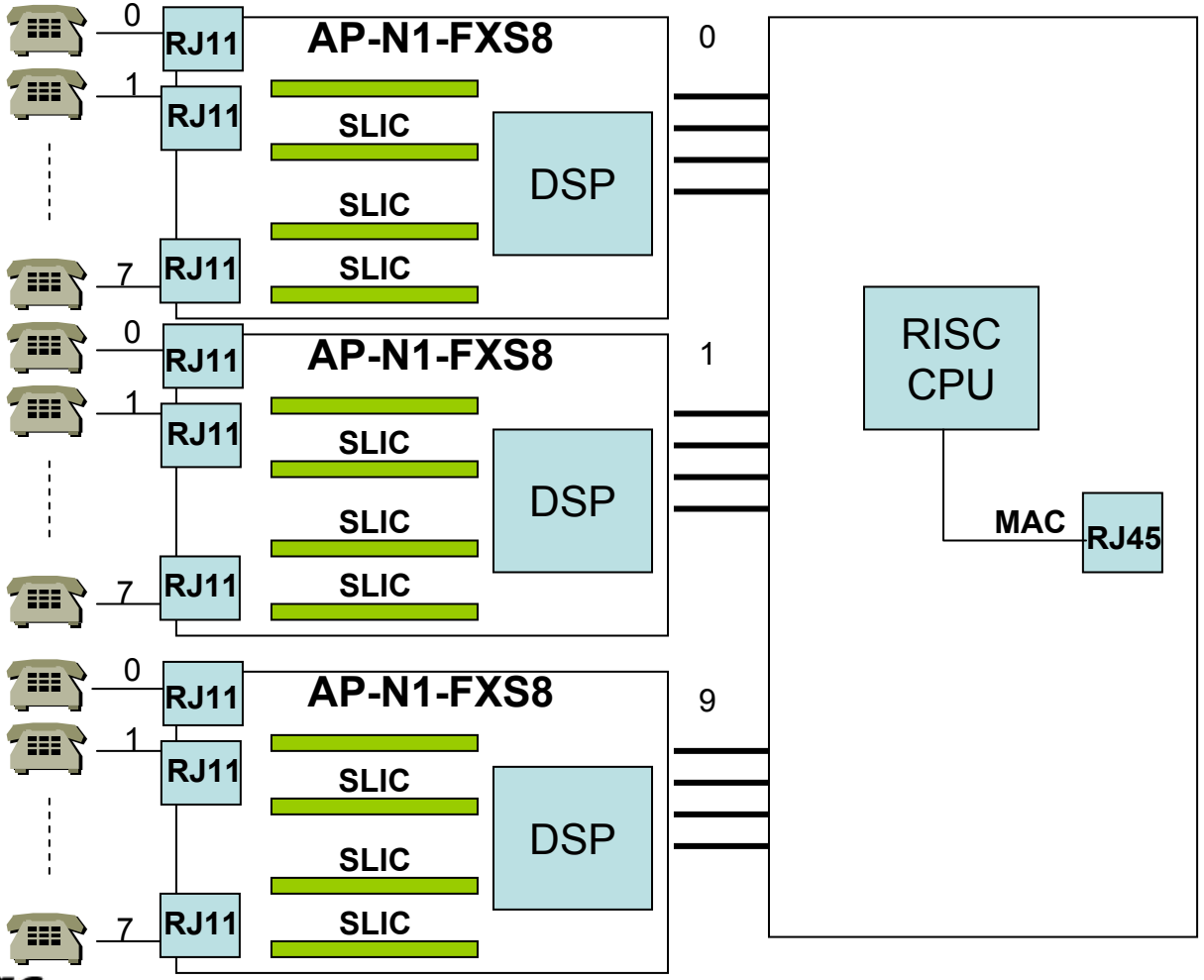

Hardware Specification

AP6200 Large Scale VoIP Gateway

RISC CPU

High-end DSP

VoIP Module Combination Diagram

64-Port(8x8Module) FXS + 16 Port (8x2 Module) FXO Gateway Service Diagram

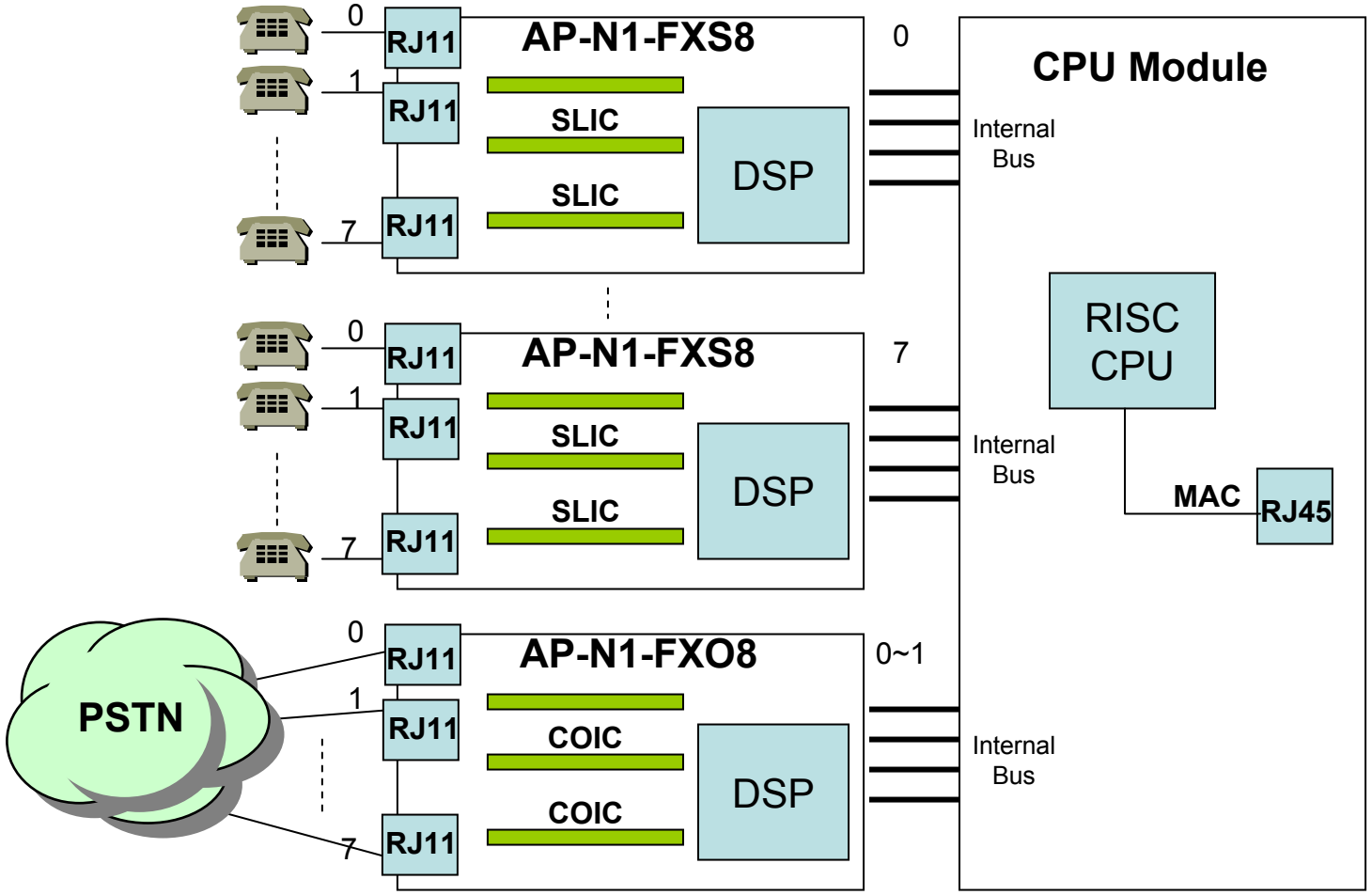

Hardware Specification

AP6200 Large Scale VoIP Gateway

RISC CPU

High-end DSP

VoIP Module Combination Diagram

32-Port(8x4Module) FXS + 1 Port Digital E1 Gateway Service Diagram

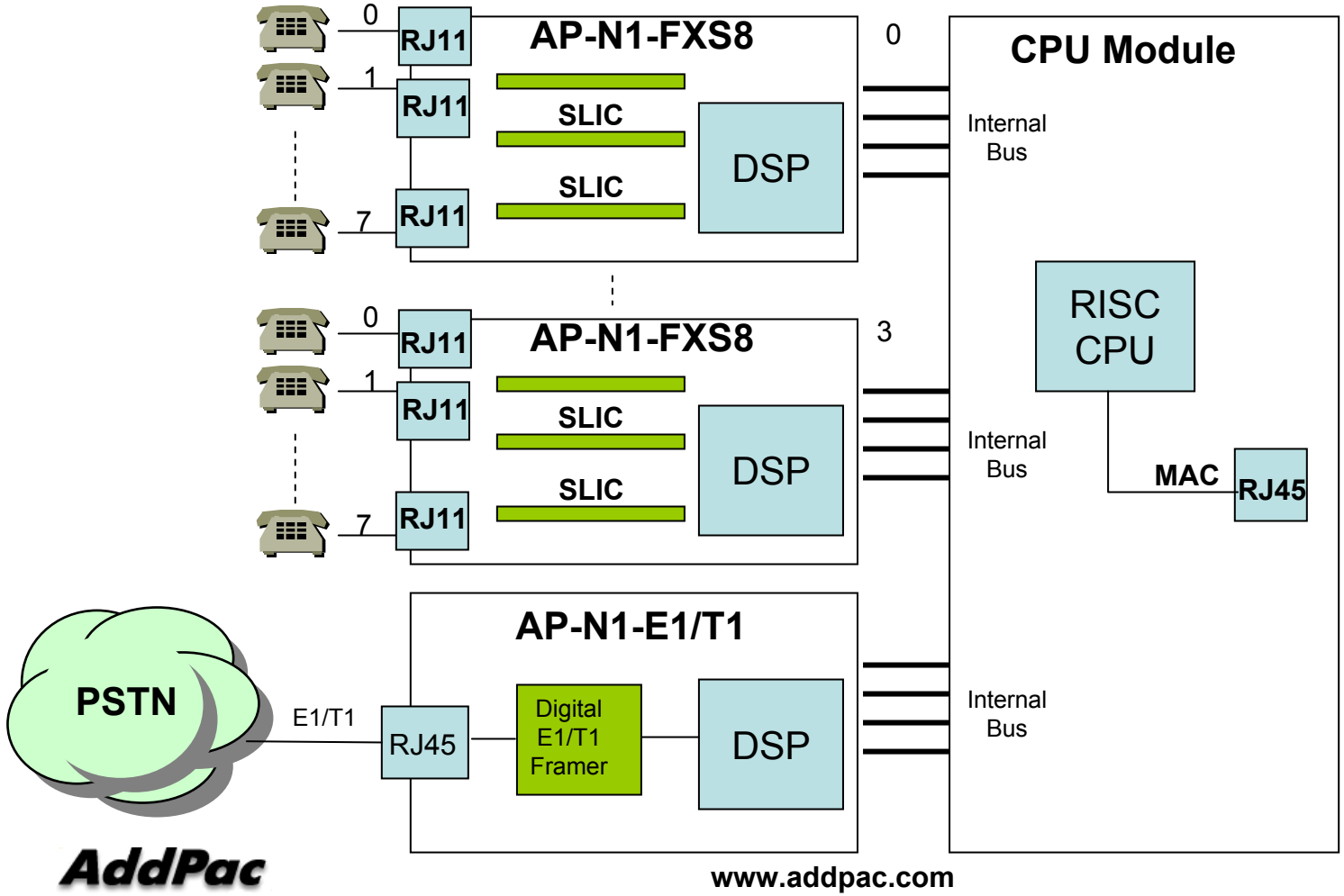

VoIP (Voice over IP) Service

AP6200 Large Scale VoIP Gateway

- **H.323, SIP Concurrent VoIP Stack**
- **H.323**
  - **ITU-T Standard H.323 v3 Support**
  - **Support H.245 Tunneling**
  - **Including H.235 Security Features**
- **SIP**
  - **IETF RFC3261 or RFC2543 SIP Standard**

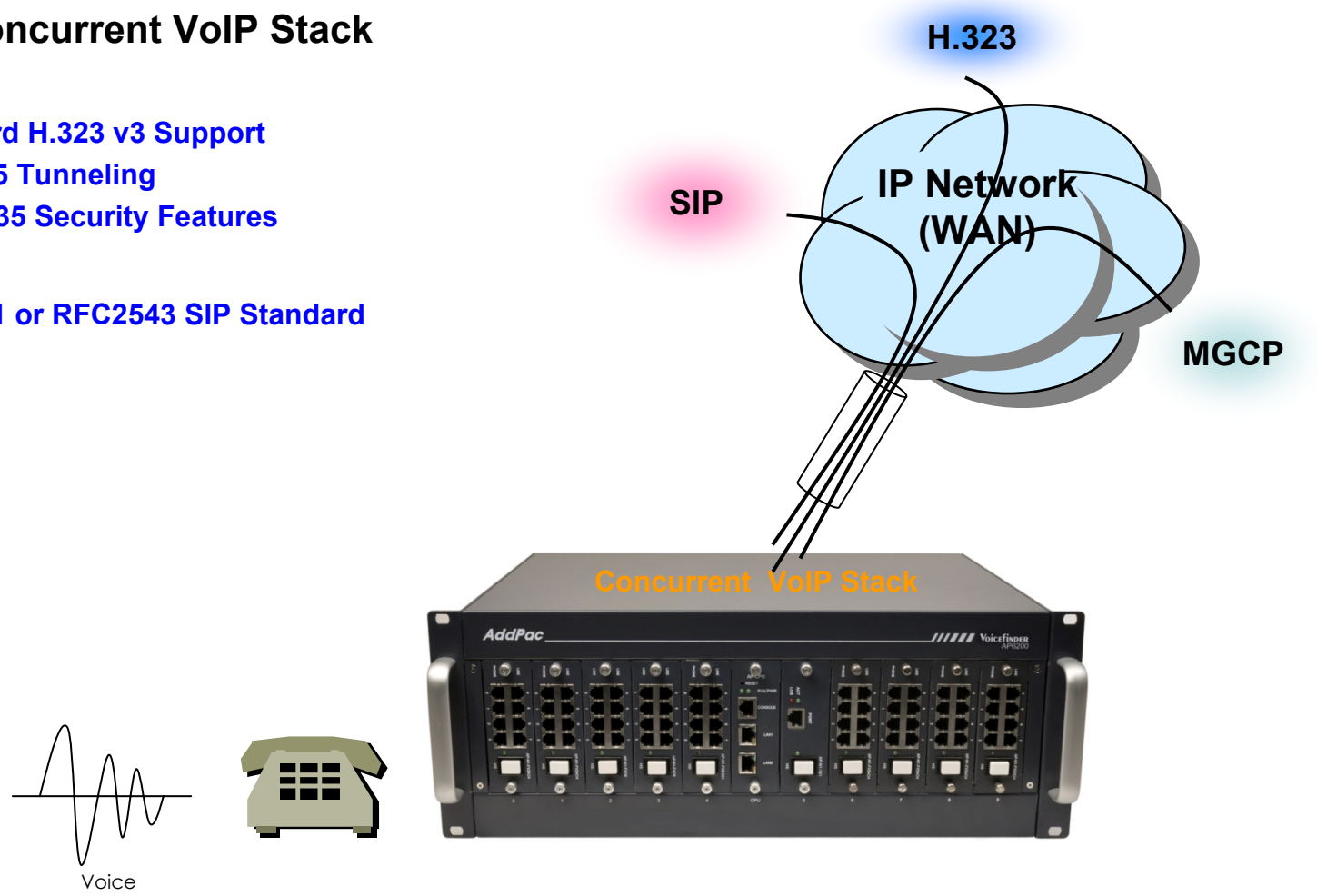

VoIP (Voice over IP) Service

AP6200 Large Scale VoIP Gateway

- **H.323**
  - Fast connect, normal connect support
  - H.245 tunneling support
  - Q.931 response message setting for inbound VoIP calls
  - H.245 logical channel open timing selection function
  - Start H.245 procedure support
  - DTMF / Hook flash relay with H.245 alphanumeric / signal
  - Secondary gatekeeper support
  - Gatekeeper assignment according to the domain name
  - Gatekeeper discovery with multicast
  - Lightweight RRQ support
  - Signaling TCP port assignment
  - Resource threshold setting with RAI
  - H.235 clear-token, crypto-token support
  - canMapAlias support
  - Technical prefix (supported prefix) support
  - Public IP assignment in NAT environment
- **SIP**
  - Gateway-based / Endpoint-based registration support
  - Secondary proxy-server assignment function
  - SIP signaling port change function
  - SIP proxy server assignment according to the domain name
  - T.38 real-time fax relay support
  - DTMF relay support with RFC2833 / OPTION message
  - Re-INVITE support

VoIP (Voice over IP) Service

AP6200 Large Scale VoIP Gateway

- **Voice Codec**
  - G.711 A-Law, G.711 U-Law
  - G.726 r16, G.726 r32
  - G.729A
  - G.723.1 r63, G.723.1 r53
  - VAD (Voice Activity Detection) function support
  - DTMF relay support (H.323, SIP, MGCP common) based on RFC2833
- **RTP**
  - Redundant RTP packet transmission in case of severe packet loss
  - Dynamic jitter buffer management and RPT packet jitter and loss compensation with heuristic & DSP error concealment
  - Static jitter buffer setting support
  - Voice frame per RTP packet number control for each codec
  - In-band ring-back tone support
  - Virtual ring-back tone support
  - Tone parameter change support

- **FAX**
  - Fax relay mode supporting T.38, inband-T.38, bypass mode
  - Lost packet compensation with redundant setting in case of T.38 fax relay
  - Fax relay mode, rate setting for remote end

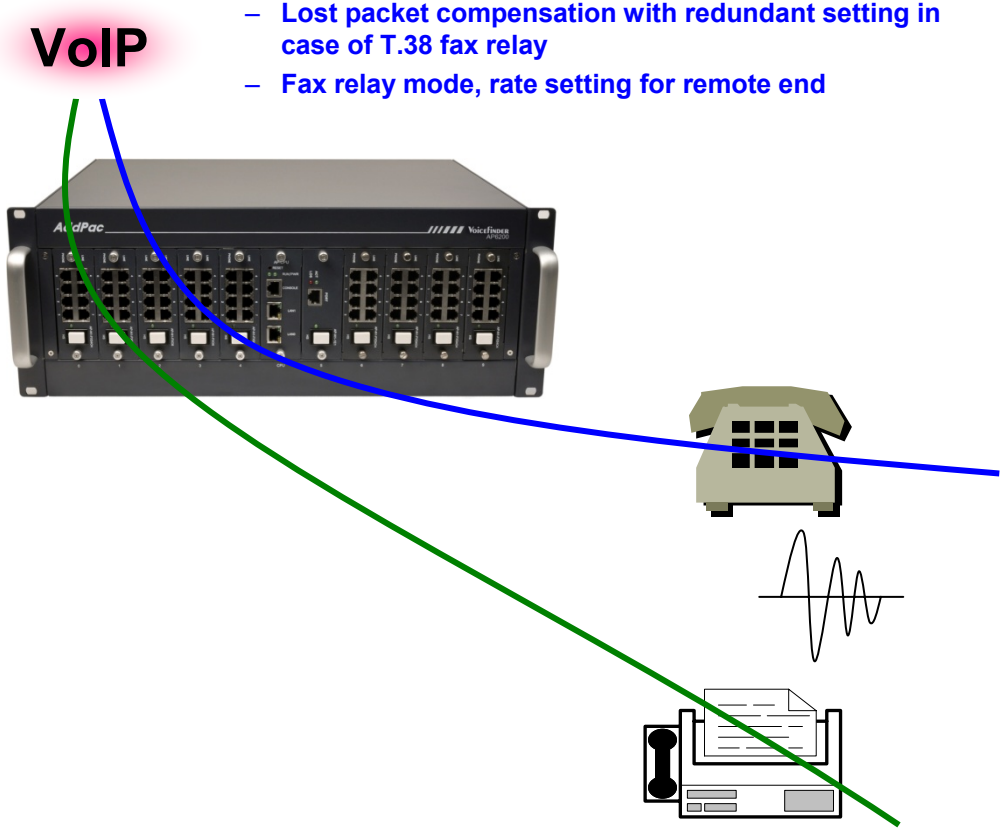

VoIP (Voice over IP) Service

AP6200 Large Scale VoIP Gateway

- **VoIP Call Controls**
  - Hot line connection function with PLAR (Private Line Auto Ring Down)
  - Leased line emulation function
  - Connection monitoring function
  - Fault tolerant with Redundancy and Call Distribution among Gateways for load balancing
  - Call attempt with IP address
  - H.323, SIP, MGCP inbound call connection for each voice port
  - Multiple E.164 setting for one voice port
  - One E.164 or digit pattern can be assigned to more than one voice port
  - Hunting with Longest match/ priority/ sequence/ random
  - One stage call setup by Digit forwarding
  - Call barring with specific digit patterns
  - Calling and called number conversion for PSTN outbound calls
  - PSTN rerouting in case of VoIP call attempt failure

- **VoIP Call Controls (cont.)**
  - Call transfer for internal calls
  - Call pickup for internal calls
  - Calling and called number conversion for VoIP outbound calls
  - Calling and called number conversion for VoIP inbound calls
  - Fax broadcasting call control

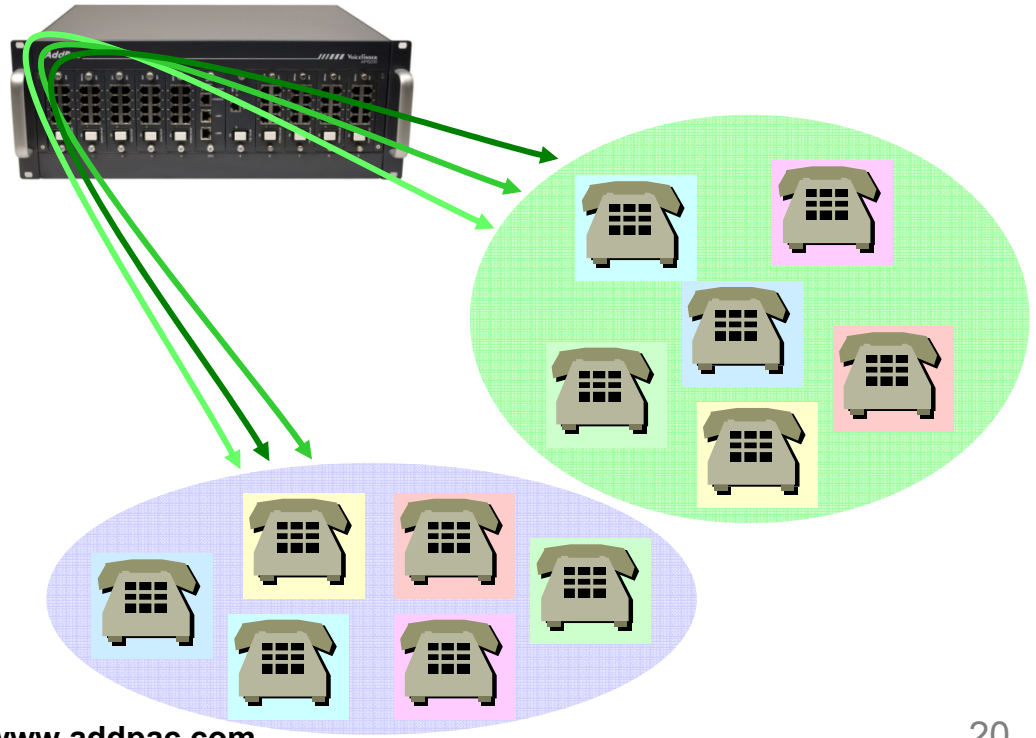

Advanced QoS Features

AP6200 Large Scale VoIP Gateway

- **Enhances Transmit Voice QoS Features**
  - Voice Traffic Priority Queuing
  - QoS Service Profiling
  - Providing Virtual Network Transmit Algorithm
  - Real-time Voice Traffic QoS Support
  - RTP Packet Transmit Interval Control
  - Supporting RTP Packet Redundancy Scheme
  - IP Header Control such as ToS, Diffserv
- **Enhances Receive Voice QoS Features**
  - Dynamic Jitter Buffer Management
  - Error Concealment
  - Support T.38 FAX Data Error Recovery Scheme

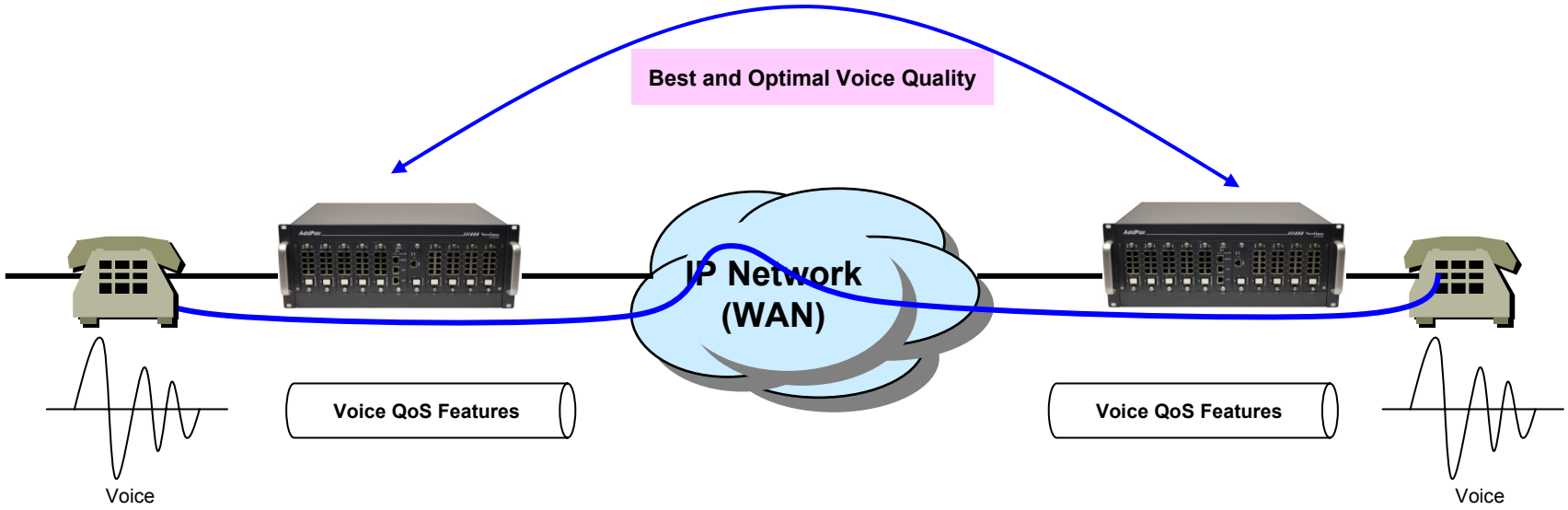

Network Protocols

AP6200 Large Scale VoIP Gateway

Basic Network Protocols
- ARP, IPv4, TCP, UDP, ICMP, SCTP, IGMP, MLD

Routing Protocol
- IPv4 : Static

Service Protocol
- FTP, Telnet, TFTP, DHCP Server/Relay, SNMP Server
- CDP (Cisco Discovery Protocol)
- DNS Resolver , DDNS(nsupdate)
- Bridge
- Syslog

IPv4 Address Configuration
- Fixed (Static)
- DHCP
- PPPoE

Miscellaneous
-Cisco Style CLI
- Standard & Extended IPv4 Access List
- Multi-level User Account Management
- IP accounting
- STUN Client

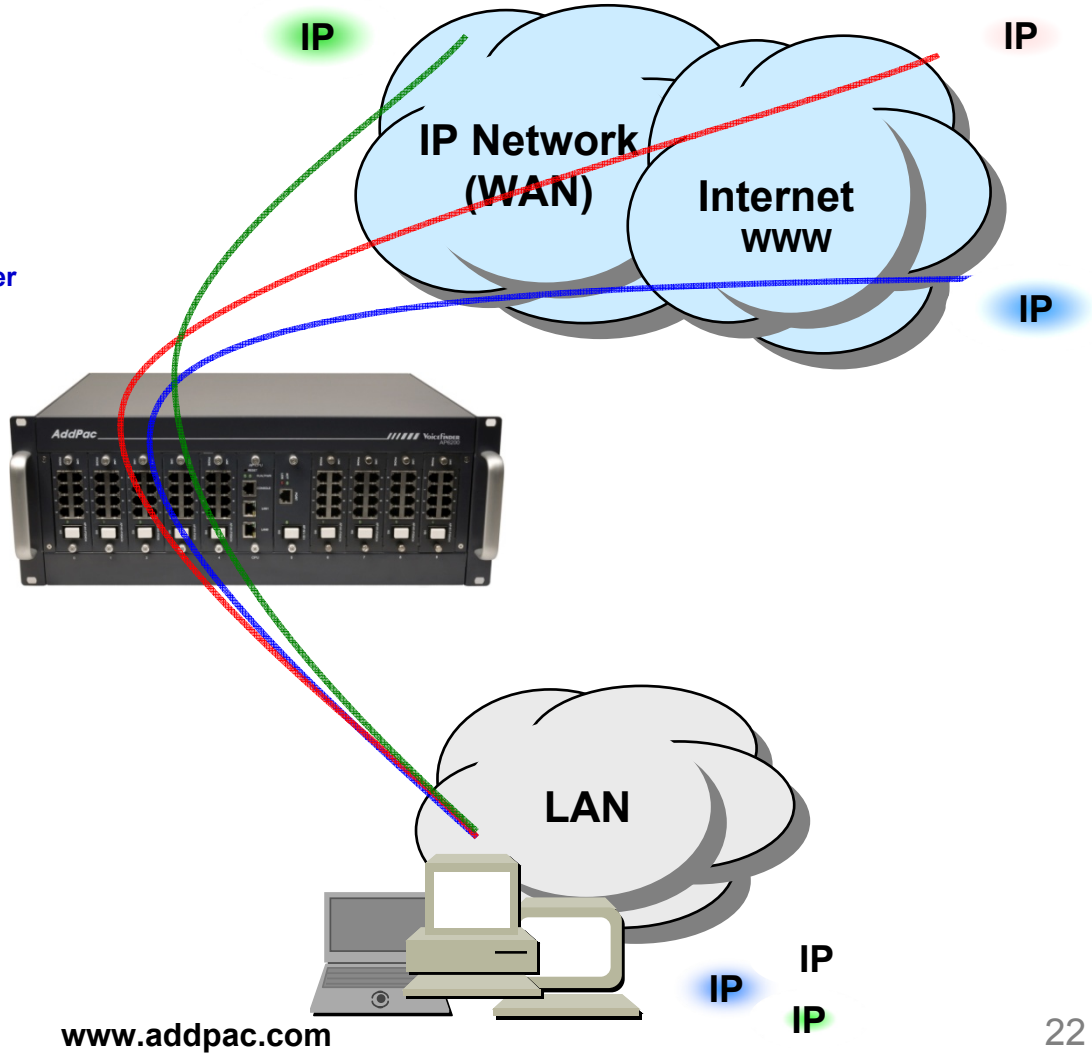

Network Management

AP6200 Large Scale VoIP Gateway

- **SNMP**
  - Standard Simple Network Management Protocol(SNMP) Agent support
  - MIB v1 and v2 Support
- **Web-based Management**
  - Smart Easy Setup
  - Standard Voice Interface
  - Standard PSTN Back-up Interface
- **Watch-dog Function**
  - Hardware, Software watch-dog services
- **Remote Management**
  - Telnet
  - Rlogin
- **Auto Upgrade Service**
  - HTTP server based APOS image and configuration file auto-upgrade support
- **Batch Job Function**
  - Text based script downloading

- **Interoperable with AP-VPMS Service**
  - AddPac VoIP Plug & Play Management System (AP-VPMS)

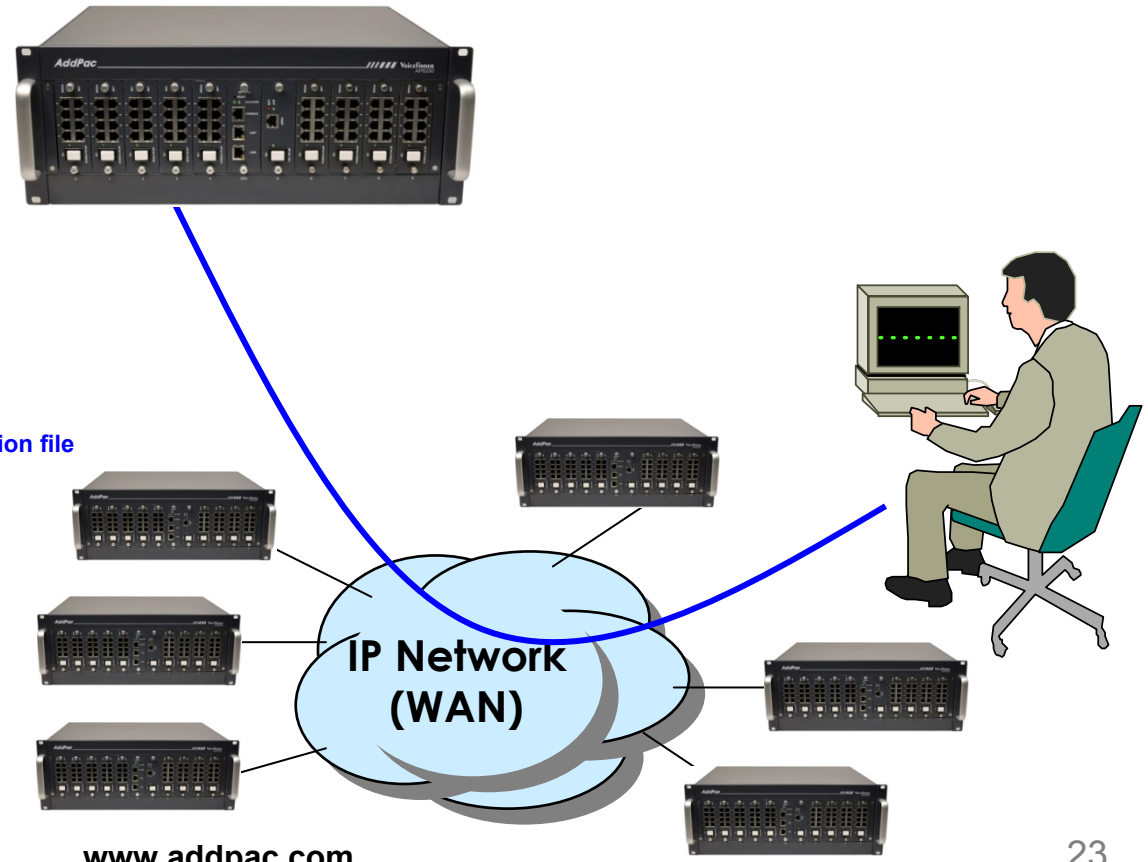

Security Management

AP6200 Large Scale VoIP Gateway

- IP packet filtering
- IP access list
- User authentication function
  - Password Authentication Protocol (PAP)
  - Challenge Handshake Authentication Protocol (CHAP)
- Enable/Disable specific protocols
- Auto-square connect of Telnet session
- Account Management function for multi-level user
- SNMP/TELNET/FTP/HTTP/TFTP port assignment function
- SNMP/TELNET/FTP access list management
- Boot mode security checking function

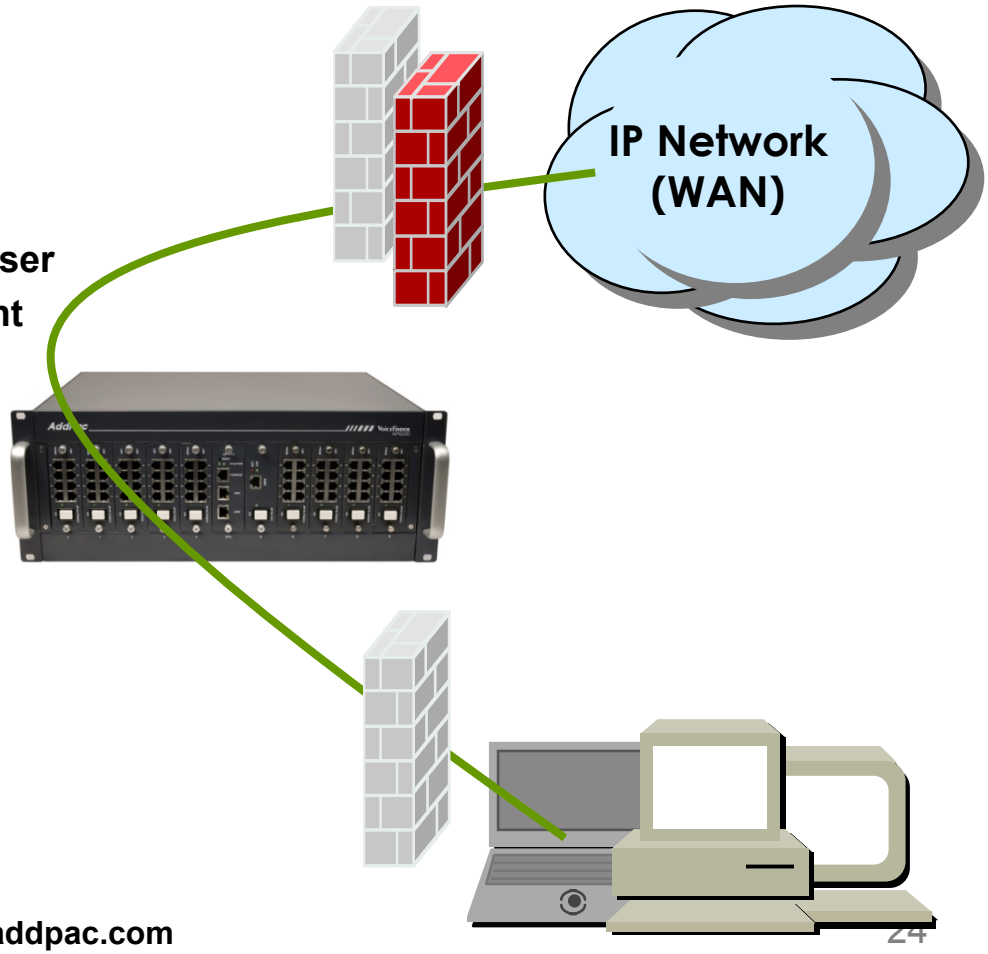

Standard Application

AP6200 Large Scale VoIP Gateway

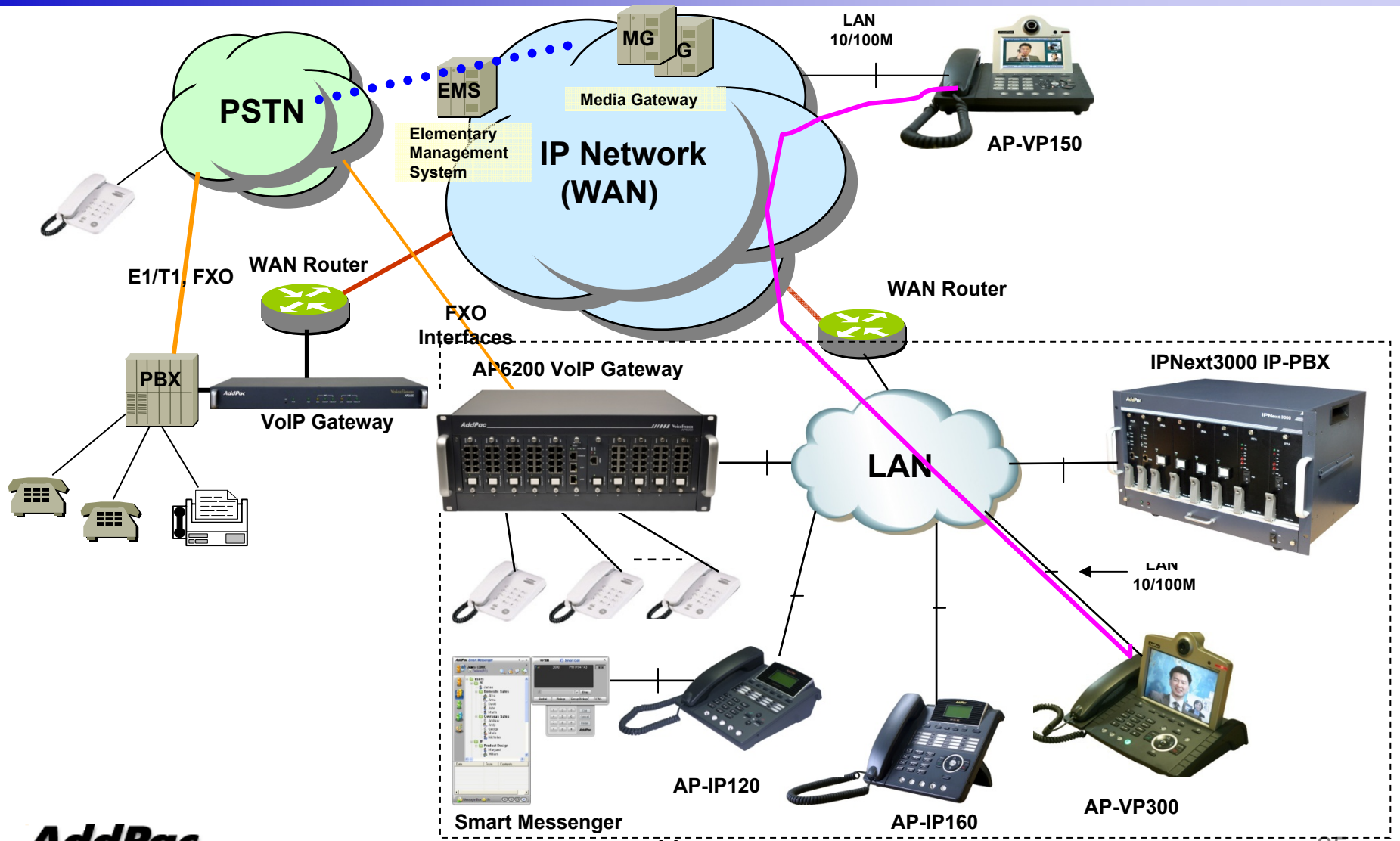

Ordering Information

- **AP6200 Large Scale VoIP Gateway Hardware**
  - AP6200 VoIP Gateway Main Body
  - RISC Microprocessor with High-end Programmable DSP Architecture
  - 2-ports 10/100Mbps Fast Ethernet(RJ45)
  - Option Module: AP-N1-FXS8, AP-N1-FXO8, AP-N1-E1, AP-N1-2E1 Cards
  - Including Network Cable & Ext. Power Supply, etc.
- **Built-in APOS Internetworking Software for AP6200**
- **Including 1 Year Hardware Warranty**
- **Product Documents**
  - Install and Operation Guide (PDF)
- **Pricing**
  - AddPac Technology Regional Sales Manager
  - Authorized Sales and Marketing Representatives
  - Please Contact www.addpac.com

Thank you!

AddPac Technology Co., Ltd.
Sales and Marketing

Phone +82.2.568.3848 (KOREA)
FAX +82.2.568.3847 (KOREA)
E-mail sales@addpac.com